xylem
Let's Solve Water

50 Hz

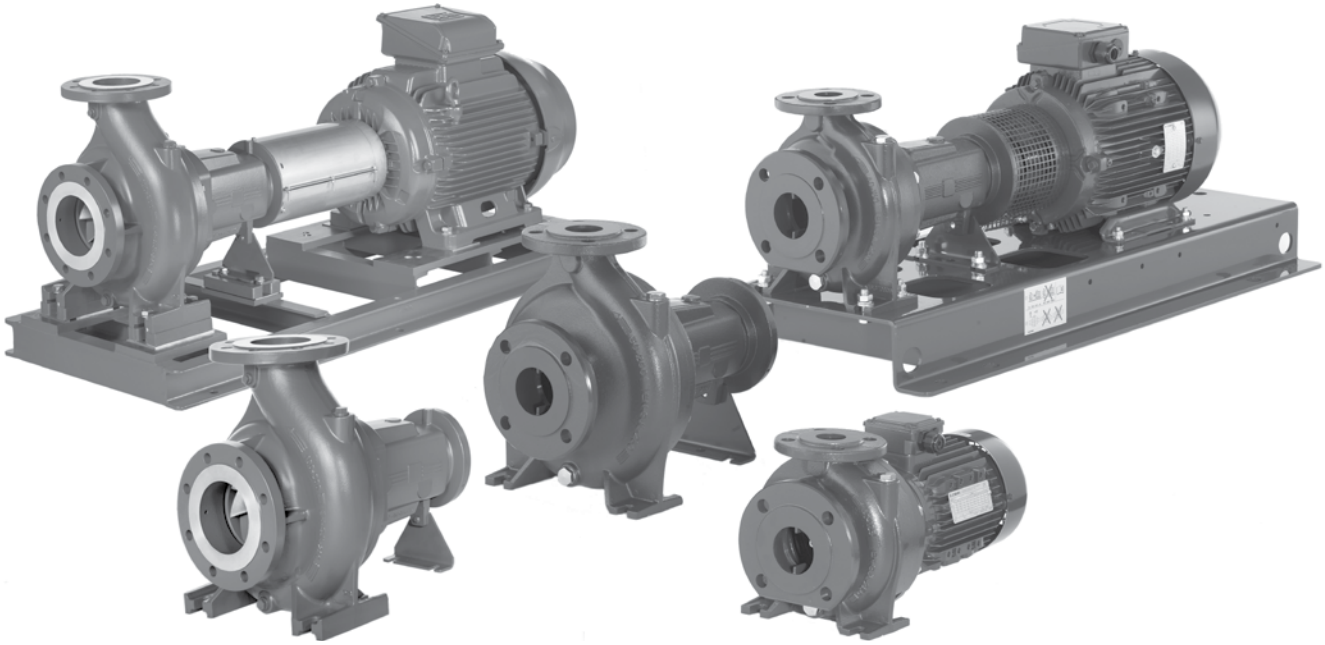

e-NSC Series

HORIZONTAL CENTRIFUGAL ELECTRIC PUMPS EQUIPPED WITH IE3 MOTORS

ErP 2009/125/CE

Cod. 191002951 Rev. H Ed.05/2019

WORLD PUMP

LOWARA
a xylem brand

Xylect

Xylect is a pump selection software with an extensive online database of product information across the entire range of pumps and related products, with multiple search options and helpful project management facilities. The system holds up-to-date product information on thousands of products and accessories.

Xylect is available:

On the website – www.xylect.com

For more information, please, see page 207-208.

Ecodesign Directive (ErP)

Over last decade the European Commission with the 'Energy Efficiency Plan' pushed the European Parliament and the Council to adopt specific measures to the purpose of reducing energy consumption and further negative environmental impacts.

Through the **Directives 2005/32/EC**, energy-using products (EuP), and 2009/125/EC, energy-related products (ErP) a framework for **ecodesign** requirements was established.

The Commission Regulations (EC) No 640/2009 and (EU) No 4/2014 have implemented two directives with regard to ecodesign requirements for **three-phase 50 Hz electric motors** placed on the market and put into service inside EU zone as self-alone units or integrated in other products.

This regulation states that motors must have **efficiency level IE3** (or IE2 + Variable Speed Drive) from **1 January 2015 for 7,5 to 375 kW** rated powers and from **1 January 2017 for 0,75 to 375 kW** ones.

The Commission Regulation (EU) No 547/2012 has implemented two directives with regard to ecodesign requirements for some types of **clean water pumps** placed on the market and put into service inside EU zone as self-alone units or integrated in other products.

This regulation states that water pumps shall have **index MEI 0.4** as minimum from **1 January 2015**.
That index comes from a dedicated formula which considers hydraulic efficiency values at 'best efficiency point' (BEP), 75 % of the flow at BEP (Part load – PL) and 110 % of the flow at BEP (Over load – OL).

The e-NSC series, for the models in the scope of the regulations above, is ErP compliant, having an index MEI equal or higher than 0,4 and IE3 motor efficiency.

Lowara, HYDROVAR, Xylect are trademarks or registered trademarks of Xylem Inc. or one of its subsidiaries.
All other trademarks or registered trademarks are property of their respective owners

LOWARA
a xylem brand

SUMMARY

GENERAL INTRODUCTION 5
APPLICATIONS & BENEFITS 6
IDENTIFICATION CODE 8
RATING PLATE 9
LIST OF MODELS AT 50 Hz, 2 POLES 10
LIST OF MODELS AT 50 Hz, 4 POLES 12
ELECTRIC PUMP CROSS-SECTION AND MAIN COMPONENTS 15
MECHANICAL SEALS 22
MOTORS 26
PUMPS 39
MINIMUM EFFICIENCY INDEX (MEI) 40
HYDRAULIC PERFORMANCE RANGE AT 50 Hz, 2 POLES 41
HYDRAULIC PERFORMANCE TABLE AT 50 Hz, 2 POLES 42
HYDRAULIC PERFORMANCE RANGE AT 50 Hz, 4 POLES 45
HYDRAULIC PERFORMANCE RANGE AT 50 Hz, 4 POLES 46
OPERATING CHARACTERISTICS AT 50 Hz, 2 POLES 51
OPERATING CHARACTERISTICS AT 50 Hz, 4 POLES 80
DIMENSIONS AND WEIGHTS 129
FORCES AND MOMENTS AT PUMP FLANGES 176
NSC with VARIABLE FREQUENCY DRIVE 177
NSC..H: e-NSC WITH HYDROVAR 179
ACCESSORIES 185
REPORTS AND DECLARATIONS 199
TECHNICAL APPENDIX 201

LOWARA
a xylem brand

e-NSC SERIES
HYDRAULIC PERFORMANCE RANGE AT 50 Hz, 2 POLES

NSC	~ 2900 [rpm]	ISO 9906:2012 - Grade 3B

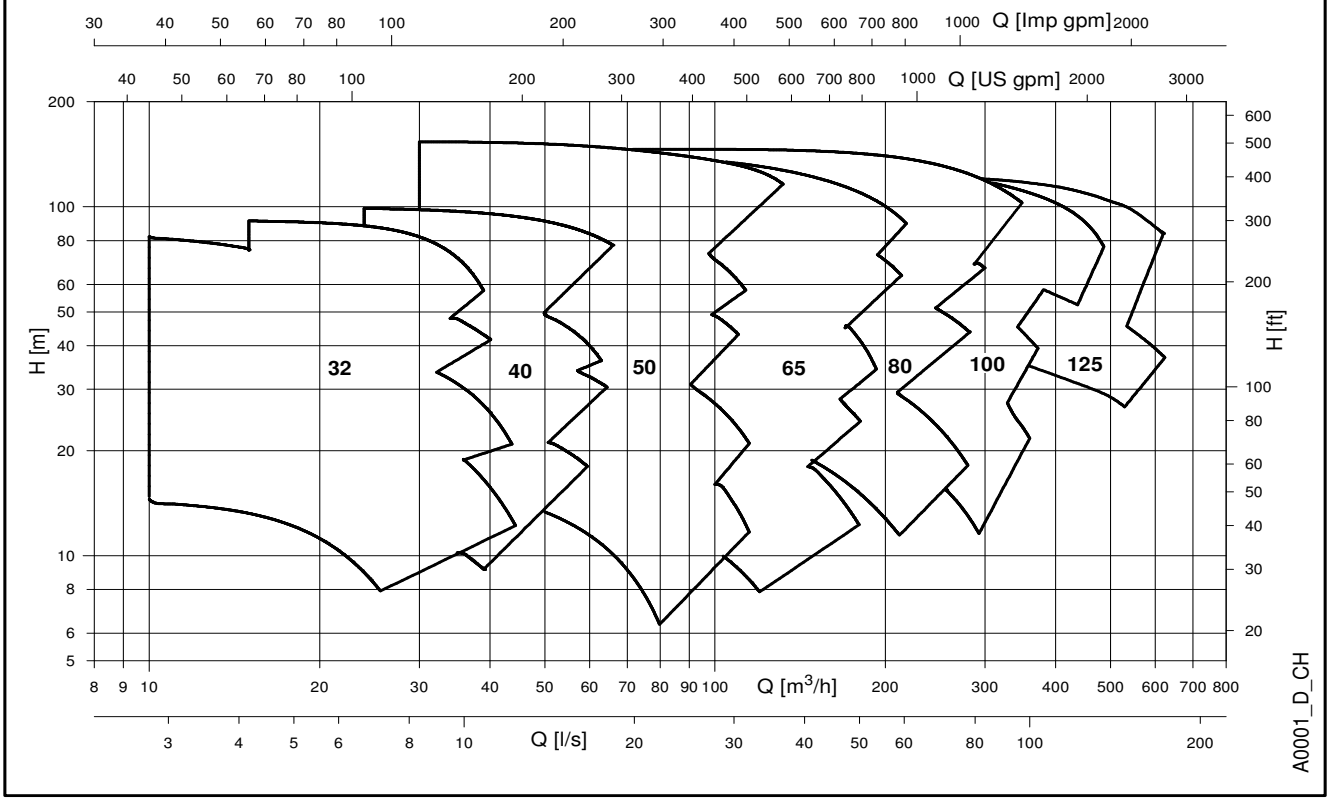

HYDRAULIC PERFORMANCE RANGE AT 50 Hz, 4 POLES

NSC	~ 1450 [rpm]	ISO 9906:2012 - Grade 3B

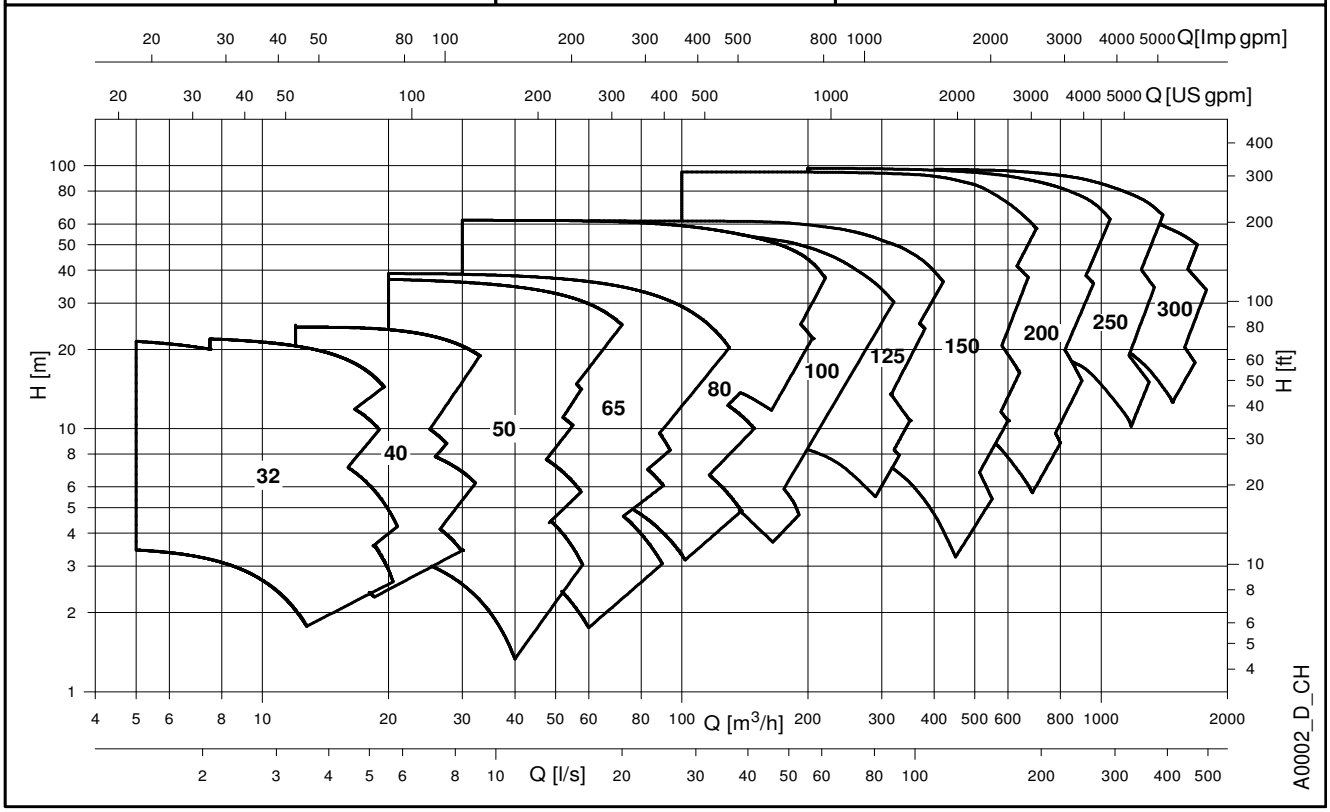

LOWARA
a xylem brand

e-NSC SERIES
GENERAL INTRODUCTION

The new **e-NSC** series is the result of the close collaboration between our customers and us; the new range has been redesigned and improved to meet the Commercial Building Services (CBS) requirements, in terms of performances and energy saving.
In addition the new **e-NSC** series can be customized to meet the needs of the Industry segment, keeping the quality in the production and the continuous reliability and robustness in the operation.

Pump design

The new **e-NSC** series is a centrifugal end-suction electro-pump with single-stage (except the two-stage NSC2 models), axial flanged suction port, radial flanged discharge and horizontal shaft. The **e-NSC** pumps have cast iron casing and impeller as standard but are also available in a wide range of materials, from bronze to duplex stainless steel, to allow for various pumping needs.
The pumps are equipped with interchangeable mechanical seals, IE3 efficiency motors, and are designed with a back pull-out configuration (impeller, adapter, and motor can be extracted without disconnecting the pump body from the piping system).
The **e-NSC** series pumps are available in the following constructions:

Extended shaft

Close-coupled by means of an adaptor bracket with an impeller keyed directly to the special motor shaft extension.

Stub shaft

Rigid-coupled with a bracket, an adaptor and a rigid coupling keyed to the standard motor shaft extension.

Frame mounted

Flexible-coupled with bracket, support, flexing coupling (special version with spacer on demand), aligning and anchoring base.

Bare shaft pump

Version without driver suitable to be coupled with a standard electric motor.

Hydraulic specifications

- Maximum delivery: up to **640** m³/h for 2 poles range.
  up to **1900** m³/h for 4 poles range.
- Maximum head: up to **154** m for 2 poles range.
  up to **100** m for 4 poles range.
- Hydraulic performance compliant with ISO 9906:2012 (Grade 3B).
- Fluid temperature range:
  - standard version (with mechanical seal BQ7EGG-WA and EPDM gasket) **-25** to **+120 °C**.
  - versions on request (depending on mechanical seal and gasket) **-20*** or **-25** to **+120** or **+140 °C**.
- Maximum operating pressure:
  - standard version with mechanical seal BQ7EGG-WA and cast iron casing: **16 bar** @ 90 °C and 10 bar @ 120 °C
  - version with other mechanical seal and casing of cast iron: **16 bar** @ 120 °C and 14,9 bar @ 140 °C
    cast ductile iron: **16 bar** @ 120 °C and 15,6 bar @ 140 °C
    stainless steel: **16 bar** @ 50 °C and 14,8 bar @ 140 °C
    duplex: **16 bar** @ 140 °C
  - NSC2 models with mechanical seal BQ7EGG-WA and cast iron casing: **12 bar** @ 110 °C and 10 bar @ 120 °C
  - see pages 22 to 25 for more information.

* Fluoro-elastomer: FPM (old ISO), FKM (ASTM & new ISO).

- Connection dimensions according to EN 733 for models 32-125/200, 40-125/250, 50-125/250, 65-125/315, 80-160/315, 100-200/400, 125-250/400,150-315/400

Motor specifications

- Squirrel cage in short circuit enclosed construction with external ventilation (TEFC).
- 2-pole and 4-pole ranges.
- **IP55** protection degree as motor (EN 60034-5), IPX5 as electro-pump (EN 60529).
- Performances according to EN 60034-1.
- **IE3** efficiency level (three-phase 0,75 to 375 kW).
- **155 (F)** insulation class.
- Standard voltage:
  1 x 220-240 V 50 Hz for power up to 2,2 kW
  3 x 220-240/380-415 V 50 Hz for power up to 3 kW
  3 x 380-415/660-690 V 50 Hz for power above 3 kW
- Maximum ambient temperature: 40 °C.

Note
- Anti-clockwise rotation when facing pump's suction port.
- Pump does not include counter-flanges.

List of the Directives	**and the main technical norms**
- Machinery Directive MD 2006/42/EC	EN 809, EN 60204-1 (safety) EN 1092-2 (cast and ductile iron flanges) EN 1092-1 (stainless steel and duplex flanges)
- Electromagnetic Compatibility Directive EMCD 2004/108/EC	EN 61000-6-1, EN 61000-6-3
- Ecodesign requirements for energy-related products ErP 2009/125/EC, Regulation (EC) No 640/2009, Regulation (EU) No 4/2014, Regulation (EU) No 547/2012	EN 60034-30:2009, EN 60034-30-1:2014 (electric motors)

LOWARA
a xylem brand

e-NSC SERIES
for COMMERCIAL BUILDING SERVICES (CBS)
APPLICATIONS & BENEFITS

Applications

The **e-NSC** series is suitable for many different applications demanding reliable and efficient products that require constant or variable duty points in cost saving operation.

The e-NSC Series can be used for the following CBS applications:

- **HVAC**
  - Liquid transfer in heating systems.
  - Liquid transfer in air-conditioning systems.
  - Liquid transfer in ventilation systems.

- **Water Supply**
  - Pressure boosting in commercial buildings.
  - Irrigation systems.
  - Water transfer for green houses.

- **Fire Fighting**

Benefits

The e-NSC Series permit to achieve the following benefits.

- **Performances**: the e-NSC pumps are ErP 2015 compliant, equipped with IE3 motors and with the right hydraulic coverage for CBS applications. The standard full cast iron version with PN16 *, 140 °C * maximum fluid temperature and EPDM elastomer is exactly what the CBS Market needs.

- **Reliability**: the high quality in production, the robust construction and operation, the easily interchangeable mechanical seals, and wear rings guarantee a continuous operation without faults and a shorter down time for maintenance.

- **Versatility**: beside the standard offer, the e-NSC series is available in many different material configurations for casing, impeller, and elastomers as well as different construction methods to address a wide range of applications.

- **Total cost ownership**: the best hydraulic and electric efficiency, the HYDROVAR-equipped versions, the easy and quick maintenance, permit to reduce the operation and maintenance cost and to save energy when the pump is working.

- **Potable water use**: All pumps equipped with standard mechanical seal are certified for drinking water use (ACS and D.M.174/04).

- **Pre-post sales support**: we are continuously working close to our customers to help them in selecting the right pump for the specific application. An improved user-friendly selection software improved with many selection tools is available on the website, on DVD or on Apps for mobile phones. Experienced engineers are fully dedicated to big projects for Municipality.

Features

- Discharge ports DN32 to DN300 *.
- Wide performance range up to 154 m head and 1900 m^3/h flow.
- Nominal pressure of 16 bar *.
- Wide range of temperatures for pumped liquids: -25°C to +140°C *.
- Wide range of materials for many different kinds of pumped liquid.
- Wide range of voltages.
- High performance IE3 motors.
- Variable speed by optional HYDROVAR drive.

* NSC2 models: PN12, 120 °C, suction 2", discharge 1¼".

LOWARA
a xylem brand

e-NSC SERIES for INDUSTRY APPLICATIONS & BENEFITS

Applications

The e-NSC series and the different available configurations and standard options have been designed to cover a wide range of applications in the Industry segment. The e-NSC series can be installed in machines where compactness and high performances are a must or within industrial processes where the user looks for a robust and reliable design for the handling of many different liquids.

The e-NSC series can be used for the following Industry applications:

- **Process**
  - Process cooling
  - Process heating
  - Heat recovery
- **Water Supply**
  - Water boosting
  - Water treatment
  - Washing and cleaning

Benefits

The e-NSC Series permit to achieve the following benefits:

- **Efficiency**: new designed high efficiency hydralics, IE3 motors, and the option with variable speed by the HYDROVAR drive sets the basis for very low operation costs.
- **Reliability**: various mechanical seal materials and options are available to meet the exact needs of your specific application. The e-NSC is also designed for easy maintenance and all service points are easily reachable to reduce downtime.
- **Know How**: the perfect configuration for an application can be made with the selection tool or with the support of our industrial experienced employees.
- **A global platform**: the e-NSC series are assembled in different factories across the world to make the e-NSC always "closer" to our customer. Beyond our commitment to reduce the carbon footprint of e-NSC, this global platform secures the availability of the same design with the same quality processes everywhere.

Features

- Discharge ports DN32 to DN300 *.
- Wide performance range up to 154 m head and 1900 m^3/h flow.
- Nominal pressure of 16 bar *.
- Wide range of temperatures for pumped liquids: -25°C to +140°C *.
- Wide range of materials for many different kinds of pumped liquid.
- Wide range of voltages.
- High performance IE3 motors.
- Variable speed by optional HYDROVAR drive.

* NSC2 models: PN12, 120 °C, suction 2", discharge 1¼".

LOWARA
a xylem brand

e-NSC SERIES
IDENTIFICATION CODE

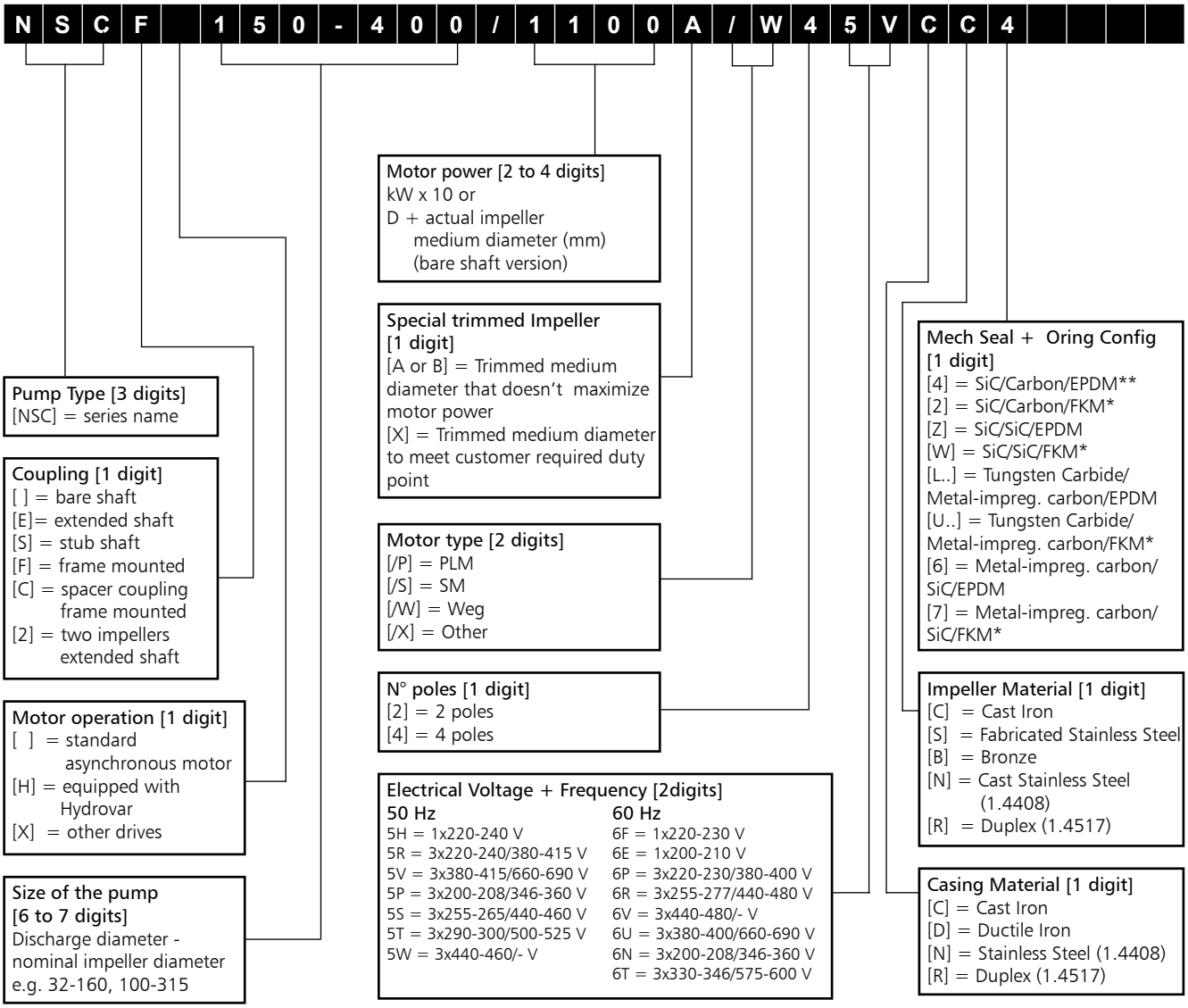

* = FPM (old ISO), FKM (ASTM & new ISO)
** [4] = SiC/Metal-impreg. carbon/EPDM for RR version

EXAMPLES

NSCS 100-250/900/W25RCC4
End-suction, electric pump with stub shaft coupling, DN 100 nominal discharge port, 250 mm nominal impeller diameter, 90 kW rated motor power,WEG IE3 model, 2-pole, 50 Hz 220-240/380-415 V, cast iron casing, cast iron impeller, Silicon carbide/Carbon/ EPDM mechanical seal.

NSCF 150-400/1100A/W45VCC4
End-suction, electric pump with frame mounted coupling, DN 150 nominal discharge port, 400 mm nominal impeller diameter, 110 kW rated motor power, trimmed impeller, WEG IE3 model, 4-pole, 50 Hz 380-415/660-690 V, cast iron casing, cast iron impeller, Silicon carbide/Carbon/EPDM mechanical seal.

NSC 150-400/D423CCZ
End-suction, bare shaft pump, DN 150 nominal discharge port, 400 mm nominal impeller diameter, 423 mm actual impeller medium diameter, cast iron casing, cast iron impeller, Silicon carbide/ Silicon carbide/EPDM mechanical seal.

LOWARA
a xylem brand

e-NSC SERIES
RATING PLATE

ELECTRIC PUMP

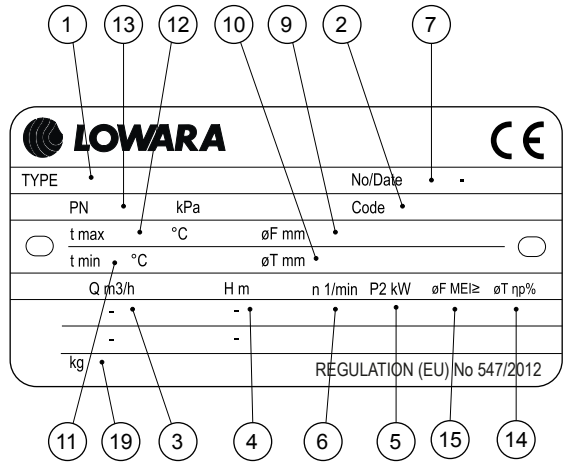

PUMP ONLY (NSC)

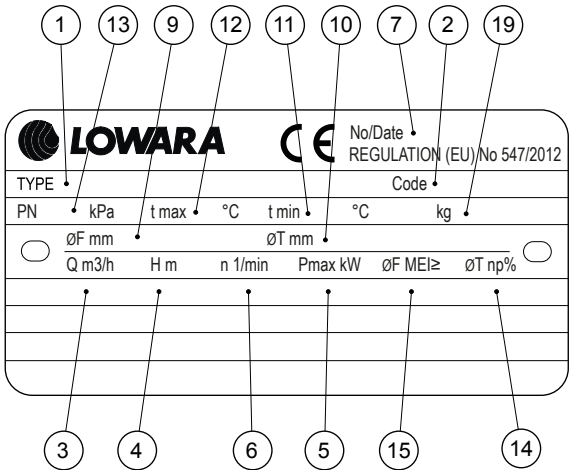

LEGEND

1 - Electric pump unit type
2 - Electric pump unit code
3 - Flow range
4 - Head range
5 - Nominal or maximum pump power
6 - Speed
7 - Serial number, or
order number + order position number
9 - Full impeller diameter (only filled in for trimmed impellers)
10 - Trimmed impeller diameter (only filled in for trimmed impellers)
11 - Minimum operating liquid temperature
12 - Maximum operating liquid temperature
13 - Maximum operating pressure
14 - Hydraulic efficiency in best efficiency point (50 Hz)
15 - Minimum efficiency index MEI, as per Regulation (EU) No 547/2012 (50 Hz)
19 - Weight

LEGEND

1 - Pump type
2 - Pump code
3 - Flow range
4 - Head range
5 - Maximum absorbed pump power
6 - Speed
7 - Serial number, or
order number + order position number
9 - Full impeller diameter (only filled in for trimmed impellers)
10 - Trimmed impeller diameter (only filled in for trimmed impellers)
11 - Minimum operating liquid temperature
12 - Maximum operating liquid temperature
13 - Maximum operating pressure
14 - Hydraulic efficiency in best efficiency point (50 Hz)
15 - Minimum efficiency index MEI, as per Regulation (EU) No 547/2012 (50 Hz)
19 - Weight

Note for electric pump unit: refer to motor data plate for electrical data.

LOWARA
a xylem brand

e-NSC SERIES
LIST OF MODELS AT 50 Hz, 2 POLES

SIZE NSC..2	kW	VERSION NSC2	NSCE	NSCS	NSCF	NSCC
32-125/11(*)	1,1	-	●	●	●	●
32-125/15(*)	1,5	-	●	●	●	●
32-125/22(*)	2,2	-	●	●	●	●
32-125/30	3	-	●	●	●	●
32-160/22(*)	2,2	-	●	●	●	●
32-160/30	3	-	●	●	●	●
32-160/40	4	-	●	●	●	●
32-160/55	5,5	-	●	●	●	●
32-200/30	3	-	●	●	●	●
32-200/40	4	-	●	●	●	●
32-200/55	5,5	-	●	●	●	●
32-200/75	7,5	-	●	●	●	●
32-250/55	5,5	●	–	–	–	–
32-250/75	7,5	●	–	–	–	–
32-250/75	7,5	–	●	●	●	●
32-250/92	9,2	-	●	–	–	–
32-250/110A	11	-	–	●	●	●
32-250/110	11	-	●	●	●	●
32-250/150	15	-	●	●	●	●
40-125/15(*)	1,5	-	●	●	●	●
40-125/22(*)	2,2	-	●	●	●	●
40-125/30	3	-	●	●	●	●
40-125/40	4	-	●	●	●	●
40-160/30	3	-	●	●	●	●
40-160/40	4	-	●	●	●	●
40-160/55	5,5	-	●	●	●	●
40-160/75	7,5	-	●	●	●	●
40-200/55	5,5	-	●	●	●	●
40-200/75	7,5	-	●	●	●	●
40-200/92	9,2	-	●	–	–	–
40-200/110A	11	-	–	●	●	●
40-200/110	11	-	●	●	●	●
40-250/92	9,2	-	●	–	–	–
40-250/110A	11	-	–	●	●	●
40-250/110	11	-	●	●	●	●
40-250/150	15	-	●	●	●	●
40-250/185	18,5	-	●	●	●	●
40-250/220	22	-	●	●	●	●
50-125/30	3	-	●	●	●	●
50-125/40	4	-	●	●	●	●
50-125/55	5,5	-	●	●	●	●
50-125/75	7,5	-	●	●	●	●
50-160/55	5,5	-	●	●	●	●
50-160/75	7,5	-	●	●	●	●
50-160/92	9,2	-	●	–	–	–
50-160/110A	11	-	–	●	●	●
50-160/110	11	-	●	●	●	●
50-200/92	9,2	-	●	–	–	–
50-200/110A	11	-	–	●	●	●
50-200/110	11	-	●	●	●	●
50-200/150	15	-	●	●	●	●
50-200/185	18,5	-	●	●	●	●

SIZE NSC..2	kW	VERSION NSCE	NSCS	NSCF	NSCC
50-250/150	15	●	●	●	●
50-250/185	18,5	●	●	●	●
50-250/220	22	●	●	●	●
50-250/300	30	–	●	●	●
50-315/370	37	–	●	●	●
50-315/450	45	–	●	●	●
50-315/550	55	–	●	●	●
50-315/750	75	–	●	●	●
65-125/40	4	●	●	●	●
65-125/55	5,5	●	●	●	●
65-125/75	7,5	●	●	●	●
65-125/92	9,2	●	–	–	–
65-125/110A	11	–	●	●	●
65-125/110	11	●	●	●	●
65-160/75	7,5	●	●	●	●
65-160/92	9,2	●	–	–	–
65-160/110A	11	–	●	●	●
65-160/110	11	●	●	●	●
65-160/150	15	●	●	●	●
65-160/185	18,5	●	●	●	●
65-200/110	11	●	●	●	●
65-200/150	15	●	●	●	●
65-200/185	18,5	●	●	●	●
65-200/220	22	●	●	●	●
65-200/300	30	–	●	●	●
65-250/220	22	–	●	●	●
65-250/300	30	–	●	●	●
65-250/370	37	–	●	●	●
65-250/450	45	–	●	●	●
65-250/550	55	–	●	●	●
65-315/550	55	–	●	●	●
65-315/750	75	–	●	●	●
65-315/900	90	–	●	●	●
80-160/110	11	●	●	●	●
80-160/150	15	●	●	●	●
80-160/185	18,5	●	●	●	●
80-160/220	22	●	●	●	●
80-200/220	22	–	●	●	●
80-200/300	30	–	●	●	●
80-200/370	37	–	●	●	●
80-200/450	45	–	●	●	●
80-250/370	37	–	●	●	●
80-250/450	45	–	●	●	●
80-250/550	55	–	●	●	●
80-250/750	75	–	●	●	●
80-316/900	90	–	–	●	●
80-316/1100	110	–	–	●	●
80-316/1320	132	–	–	●	●
80-316/1600	160	–	–	●	●

(*) Models available also in single-phase version.

● = Available

Nsc1_models-2p50-en_c_sc

NSC2 : Two impellers Extended shaft.
NSCE : Extended shaft.
NSCS : Stub shaft.
NSCF : Frame mounted.
NSCC : Frame mounted with spacer coupling.

LOWARA
a xylem brand

e-NSC SERIES
LIST OF MODELS AT 50 Hz, 2 POLES

SIZE	kW	VERSION			
NSC		NSCE	NSCS	NSCF	NSCC
100-160/150	15	-	•	•	•
100-160/185	18,5	-	•	•	•
100-160/220	22	-	•	•	•
100-160/300	30	-	•	•	•
100-200/300	30	-	•	•	•
100-200/370	37	-	•	•	•
100-200/450	45	-	•	•	•
100-200/550	55	-	•	•	•
100-250/450	45	-	-	•	•
100-250/550	55	-	-	•	•
100-250/750	75	-	•	•	•
100-250/900	90	-	•	•	•
100-316/1100	110	-	-	•	•
100-316/1320	132	-	-	•	•
100-316/1600	160	-	-	•	•
125-200/450	45	-	•	•	•
125-200/550	55	-	•	•	•
125-200/750	75	-	•	•	•
125-200/900	90	-	•	•	•
125-315/1100	110	-	-	•	•
125-315/1320	132	-	-	•	•
125-315/1600	160	-	-	•	•
125-315/2000	200	-	-	•	•

• = Available

Nsc2_models-2p50-en_b_sc

LOWARA
a xylem brand

e-NSC SERIES
LIST OF MODELS AT 50 Hz, 4 POLES

SIZE	kW	VERSION				
NSC..4		NSC2	NSCE	NSCS	NSCF	NSCC
32-125/02B	0.25	-	•	-	•	•
32-125/02A	0.25	-	•	-	•	•
32-125/02	0.25	-	•	-	•	•
32-125/03	0.37	-	•	-	•	•
32-160/02	0.25	-	•	-	•	•
32-160/03	0.37	-	•	-	•	•
32-160/05A	0.55	-	•	•	•	•
32-160/05	0.55	-	•	•	•	•
32-200/05A	0.55	-	•	•	•	•
32-200/05	0.55	-	•	•	•	•
32-200/07	0.75	-	•	•	•	•
32-200/11	1.1	-	•	•	•	•
32-250/11A	1,1	•	-	-	-	-
32-250/11	1,1	•	-	-	-	-
32-250/11A	1.1	-	-	•	•	•
32-250/15B	1.5	-	•	-	-	-
32-250/11	1.1	-	-	•	•	•
32-250/15A	1.5	-	•	-	-	-
32-250/15	1.5	-	•	•	•	•
32-250/22	2.2	-	•	•	•	•
40-125/02A	0.25	-	•	-	•	•
40-125/02	0.25	-	•	-	•	•
40-125/03	0.37	-	•	-	•	•
40-125/05	0.55	-	•	•	•	•
40-160/03	0.37	-	•	-	•	•
40-160/05	0.55	-	•	•	•	•
40-160/07	0.75	-	•	•	•	•
40-160/11	1.1	-	•	•	•	•
40-200/07	0.75	-	•	•	•	•
40-200/11	1.1	-	•	•	•	•
40-200/15A	1.5	-	•	•	•	•
40-200/15	1.5	-	•	•	•	•
40-250/11	1.1	-	-	•	•	•
40-250/15A	1.5	-	•	-	-	-
40-250/15	1.5	-	•	•	•	•
40-250/22A	2.2	-	•	•	•	•
40-250/22	2.2	-	•	•	•	•
40-250/30	3	-	•	•	•	•
50-125/03	0.37	-	•	-	•	•
50-125/05	0.55	-	•	•	•	•
50-125/07	0.75	-	•	•	•	•
50-125/11	1.1	-	•	•	•	•
50-160/07	0.75	-	•	•	•	•
50-160/11A	1.1	-	•	•	•	•
50-160/11	1.1	-	•	•	•	•
50-160/15	1.5	-	•	•	•	•
50-200/11	1.1	-	-	•	•	•
50-200/15A	1.5	-	•	-	-	-
50-200/15	1.5	-	•	•	•	•
50-200/22A	2.2	-	•	•	•	•
50-200/22	2.2	-	•	•	•	•
50-250/22A	2.2	-	•	•	•	•
50-250/22	2.2	-	•	•	•	•
50-250/30	3	-	•	•	•	•
50-250/40	4	-	•	•	•	•

SIZE	kW	VERSION			
NSC..4		NSCE	NSCS	NSCF	NSCC
50-315/40	4	-	•	•	•
50-315/55	5.5	-	•	•	•
50-315/75	7.5	-	•	•	•
50-315/110	11	-	•	•	•
65-125/05	0.55	•	•	•	•
65-125/07	0.75	•	•	•	•
65-125/11	1.1	•	•	•	•
65-125/15	1.5	•	•	•	•
65-160/11A	1.1	-	•	•	•
65-160/15B	1.5	•	-	-	-
65-160/11	1.1	-	•	•	•
65-160/15A	1.5	•	-	-	-
65-160/15	1.5	•	•	•	•
65-160/22A	2.2	•	•	•	•
65-160/22	2.2	•	•	•	•
65-200/15	1.5	•	•	•	•
65-200/22A	2.2	•	•	•	•
65-200/22	2.2	•	•	•	•
65-200/30	3	•	•	•	•
65-200/40	4	•	•	•	•
65-250/30	3	-	•	•	•
65-250/40	4	-	•	•	•
65-250/55A	5.5	-	•	•	•
65-250/55	5.5	-	•	•	•
65-250/75	7.5	-	•	•	•
65-315/55	5.5	-	•	•	•
65-315/75	7.5	-	•	•	•
65-315/110	11	-	•	•	•
65-315/150	15	-	•	•	•
80-160/15	1.5	•	•	•	•
80-160/22A	2.2	•	•	•	•
80-160/22	2.2	•	•	•	•
80-160/30	3	•	•	•	•
80-200/30	3	-	•	•	•
80-200/40	4	-	•	•	•
80-200/55A	5.5	-	•	•	•
80-200/55	5.5	-	•	•	•
80-250/55A	5.5	-	•	•	•
80-250/55	5.5	-	•	•	•
80-250/75	7.5	-	•	•	•
80-250/110	11	-	•	•	•
80-315/110A	11	-	•	•	•
80-315/110	11	-	•	•	•
80-315/150	15	-	•	•	•
80-315/185	18.5	-	•	•	•
80-315/220	22	-	•	•	•
80-400/185	18.5	-	•	•	•
80-400/220	22	-	•	•	•
80-400/300	30	-	•	•	•
80-400/370	37	-	•	•	•

• = Available

Nsc1_models-4p50-en_d_sc

LOWARA
a xylem brand

e-NSC SERIES
LIST OF MODELS AT 50 Hz, 4 POLES

SIZE	kW	VERSION			
NSC..4		NSCE	NSCS	NSCF	NSCC
100-160/22A	2.2	-	•	•	•
100-160/22	2.2	-	•	•	•
100-160/30	3	-	•	•	•
100-160/40	4	-	•	•	•
100-200/40	4	-	•	•	•
100-200/55	5.5	-	•	•	•
100-200/75	7.5	-	•	•	•
100-250/55	5.5	-	-	•	•
100-250/75	7.5	-	•	•	•
100-250/110	11	-	•	•	•
100-315/110	11	-	•	•	•
100-315/150	15	-	•	•	•
100-315/185	18.5	-	•	•	•
100-315/220	22	-	•	•	•
100-315/300	30	-	•	•	•
100-400/300	30	-	•	•	•
100-400/370	37	-	•	•	•
100-400/450	45	-	•	•	•
125-200/55	5.5	-	•	•	•
125-200/75	7.5	-	•	•	•
125-200/110	11	-	•	•	•
125-250/75	7.5	-	•	•	•
125-250/110	11	-	•	•	•
125-250/150	15	-	•	•	•
125-315/185	18.5	-	•	•	•
125-315/220	22	-	•	•	•
125-315/300	30	-	•	•	•
125-315/370	37	-	•	•	•
125-400/370	37	-	•	•	•
125-400/450	45	-	•	•	•
125-400/550	55	-	•	•	•
125-400/750	75	-	•	•	•
150-200/110A	11	-	•	•	•
150-200/110	11	-	•	•	•
150-200/150A	15	-	•	•	•
150-200/150	15	-	•	•	•
150-250/150	15	-	•	•	•
150-250/185	18.5	-	•	•	•
150-250/220	22	-	•	•	•
150-250/300	30	-	•	•	•
150-315/300	30	-	•	•	•
150-315/370	37	-	•	•	•
150-315/450	45	-	•	•	•
150-400/450	45	-	•	•	•
150-400/550	55	-	•	•	•
150-400/750	75	-	•	•	•
150-400/900	90	-	•	•	•
150-400/1100	110	-	-	•	•
150-500/900	90	-	-	•	•
150-500/1100	110	-	-	•	•
150-500/1320	132	-	-	•	•
150-500/1600	160	-	-	•	•
150-500/2000	200	-	-	•	•

SIZE	kW	VERSION			
NSC..4		NSCE	NSCS	NSCF	NSCC
200-250/185	18.5	-	•	•	•
200-250/220	22	-	•	•	•
200-250/300A	30	-	•	•	•
200-250/300	30	-	•	•	•
200-315/300	30	-	-	•	•
200-315/370	37	-	•	•	•
200-315/450	45	-	•	•	•
200-315/550	55	-	•	•	•
200-315/750	75	-	•	•	•
200-400/750A	75	-	-	•	•
200-400/750	75	-	-	•	•
200-400/900	90	-	-	•	•
200-400/1100	110	-	-	•	•
200-400/1320	132	-	-	•	•
200-500/1320	132	-	-	•	•
200-500/1600	160	-	-	•	•
200-500/2000	200	-	-	•	•
200-500/2500	250	-	-	•	•
200-500/3150	315	-	-	•	•
250-315/370	37	-	•	•	•
250-315/450	45	-	•	•	•
250-315/550	55	-	•	•	•
250-315/750	75	-	•	•	•
250-400/750	75	-	-	•	•
250-400/900	90	-	-	•	•
250-400/1100	110	-	-	•	•
250-400/1320	132	-	-	•	•
250-400/1600	160	-	-	•	•
250-400/2000	200	-	-	•	•
250-500/1600	160	-	-	•	•
250-500/2000	200	-	-	•	•
250-500/2500	250	-	-	•	•
250-500/3150	315	-	-	•	•
250-500/3550	355	-	-	•	•
300-350/750A	75	-	-	•	•
300-350/750	75	-	-	•	•
300-350/900	90	-	-	•	•
300-350/1100	110	-	-	•	•
300-400/1100	110	-	-	•	•
300-400/1320	132	-	-	•	•
300-400/1600	160	-	-	•	•
300-400/2000	200	-	-	•	•
300-400/2500	250	-	-	•	•
300-450/1600	160	-	-	•	•
300-450/2000	200	-	-	•	•
300-450/2500	250	-	-	•	•
300-450/3150	315	-	-	•	•

• = Available

Nsc2_models-4p50-en_b_sc

SERIE e-NSC
AVAILABLE MATERIALS

Various material configurations are available to fit the needs of different pumped mediums and applications requirements.
Below are the specifics regarding the material configurations and their availability for the different pump sizes.
The material identification codes are the same used in the pump description (see page 8).

MATERIAL CONFIGURATION

COMPONENTS	CS	CC/DC	CB/DB	CN/DN	NN	RN	RR
Volute casing	Cast iron	Cast iron/Ductile iron			Stainless steel	Duplex	Duplex
Impeller	Stainless steel	Cast iron	Bronze	Stainless steel	Stainless steel		Duplex
Casing cover	Cast iron	Cast iron/Ductile iron			Stainless steel	Duplex	Duplex
Stub shaft	Stainless steel				Duplex		
Wear ring	Stainless steel				Duplex		
Impeller lock nut and washer	Stainless steel						Duplex
Impeller key	Stainless steel						Duplex
Fill and drain plugs	Stainless steel					Duplex	
Motor adapter	Cast iron						

Stub shaft and wear rings in Duplex are available as an option for all pump sizes.
For further informations, see the pages 15-21.

Nsc_configs-en_a_tm

AVAILABLE MATERIALS FOR CASING AND IMPELLER PER PUMP SIZE

DISCHARGE SIZE	IMPELLER SIZE						
	125	160	200	250	315 / 316	400	500
32	CS	CS	CS	CS			
40	CS	CS	CS	CS			
50	CS	CS	CS	CS	CC-CB-CN NN-RR		
65	CC-CB-CN NN-RR	CC-CB-CN NN-RR	CC-CB-CN NN-RR	CC-CB-CN NN-RR	CC-CB-CN NN-RR		
80		CC-CB-CN NN-RR	CC-CB-CN NN-RR	CC-CB-CN NN-RR	CC-CB-CN NN-RR	CC-CB-CN NN-RR	
100		CC-CB-CN NN-RR	CC-CB-CN NN-RR	CC-CB-CN NN-RR	CC-CB-CN NN-RR	CC-CB-CN NN-RR	
125			CC-CB-CN NN-RR	CC-CB-CN NN-RR	CC-CB-CN NN-RR	CC-CB-CN NN-RR	
150			CC-CB-CN NN-RR	CC-CB-CN NN-RR	CC-CB-CN NN-RR	CC-CB-CN NN-RR	DC-DB-DN RN-RR
200				DC-DB-DN RN-RR	DC-DB-DN RN-RR	DC-DB-DN RN-RR	DC-DB-DN RN-RR
250					DC-DB-DN RN-RR	DC-DB-DN RN-RR	DC-DB-DN RN-RR
300					DC-DB-DN RN-RR	DC-DB-DN RN-RR	DC-DB-DN RN-RR

Nsc_models-en_b_tm

NSCE SERIES
ELECTRIC PUMP CROSS-SECTION AND MAIN COMPONENTS

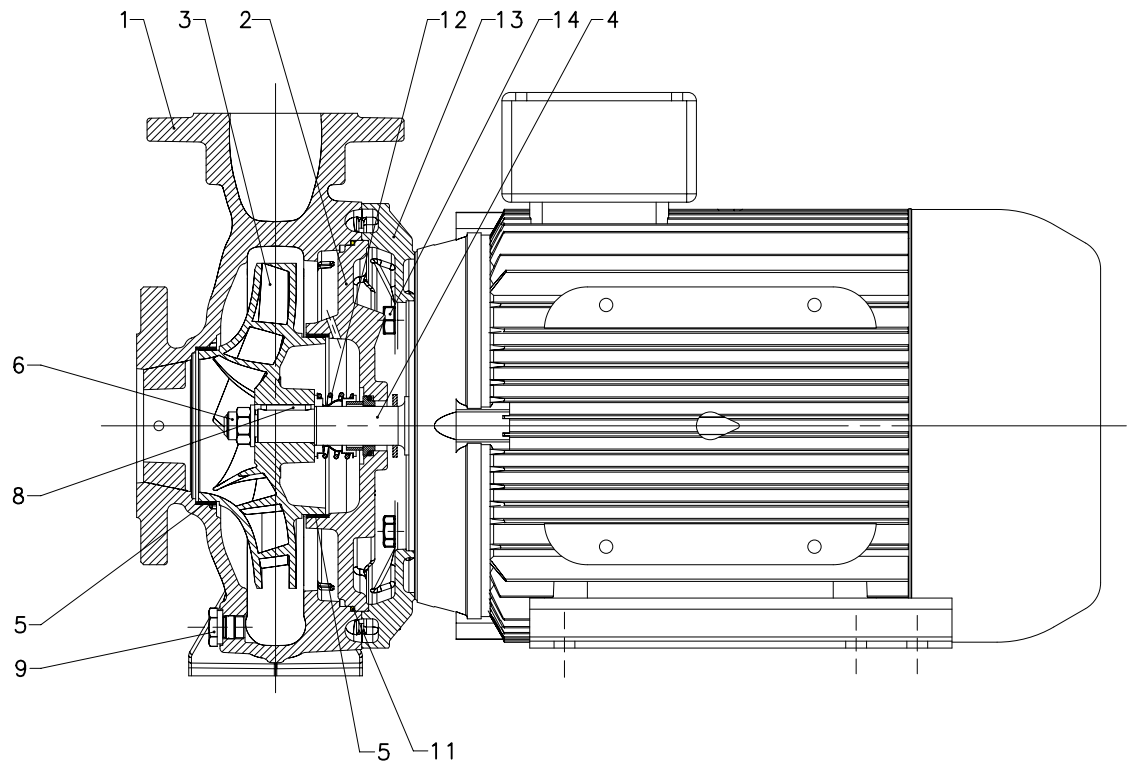

REF. N.	PART	MATERIAL	REFERENCE STANDARDS	
			EUROPE	USA
1	Volute casing	Cast iron	EN 1561 - GJL-250 (JL1040)	ASTM Class 35
2	Casing cover	Cast iron	EN 1561 - GJL-250 (JL1040)	ASTM Class 35
3	Impeller (32, 40, 50)	Stainless steel	EN 10088-1-X5CrNi18-10 (1.4301)	AISI 304
	Impeller (65, 80)	Cast iron	EN 1561 - GJL-200 (JL1030)	ASTM Class 30
		Bronze	EN 1982 - CuSn10-C (CC480K)	UNS C90700
		Stainless steel	EN 10213-GX5CrNiMo-19-11-2 (1.4408)	ASTM A743 CF8M
		Duplex	EN 10213-GX2CrNiMoCuN25-6-3-3 (1.4517)	ASTM A743 CD4MCu
4	Shaft extension	Stainless steel	EN 10088-1-X2CrNiMo17-12-2 (1.4404)	AISI 316L
5	Wear ring	Stainless steel	EN 10088-X5CrNi18-10 (1.4301)	AISI 304
6	Impeller lock nut and washer	Stainless steel	EN 10088-X5CrNi18-10 (1.4301)	AISI 304
8	Impeller key	Stainless steel	EN 10088-1-X2CrNiMo17-12-2 (1.4404)	AISI 316L
9	Fill and drain plugs	Stainless steel	EN 10088-3-X8CrNiS18-9 (1.4305)	AISI 303
11	O-Ring	EPDM (standard version)		
12	Mechanical seal	Carbon / Silicon carbide / EPDM (standard version)		
13	Motor adapter *	Aluminium	EN 1706-AC-AlSi11Cu2 (Fe) (AC46100)	-
	Motor adapter	Cast iron	EN 1561 - GJL-250 (JL1040)	ASTM Class 35
14	Volute casing fastening bolts and screws	Galvanized steel		

* 2/4 pole: 32/40/50-125, 32/40-160

Nsce-en_c_tm

LOWARA
a xylem brand

NSC2 SERIES
ELECTRIC PUMP CROSS-SECTION AND MAIN COMPONENTS

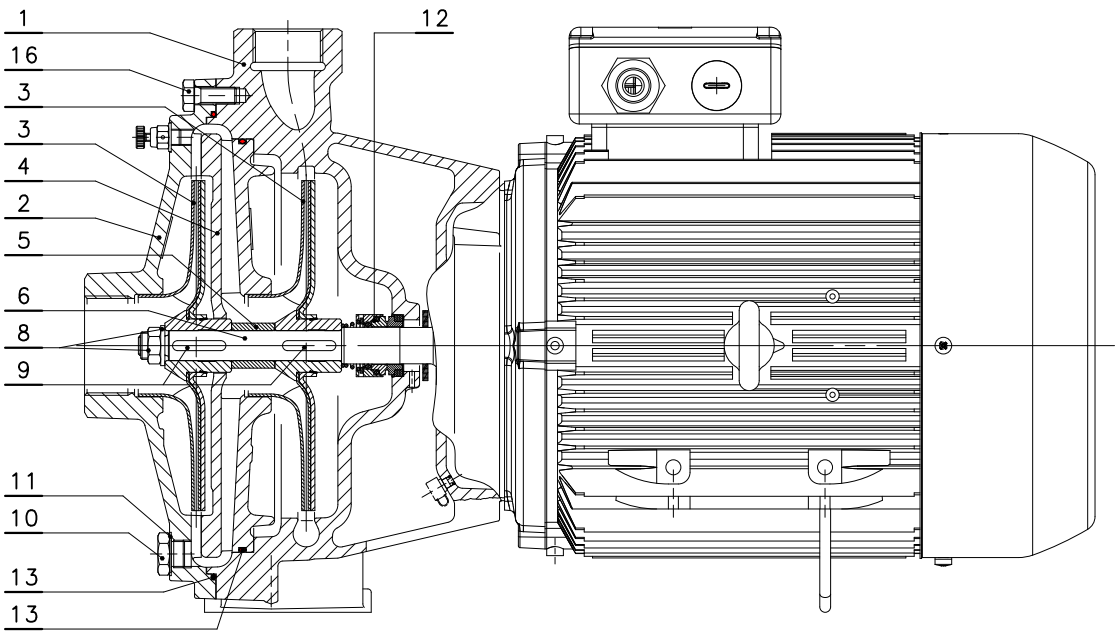

NSC2_A_DS

REF. N.	PART	MATERIAL	REFERENCE STANDARDS	
			EUROPE	USA
1	Pump body	Cast iron	EN 1561-GJL-200 (JL1030)	ASTM Class 25
2	Suction flange	Cast iron	EN 1561-GJL-200 (JL1030)	ASTM Class 25
3	Impeller	Stainless steel	EN 10088-1-X2CrNiMo17-12-2 (1.4404)	AISI 316L
4	Diffuser	Cast iron	EN 1561-GJL-200 (JL1030)	ASTM Class 25
5	Impeller spacer	Stainless steel	EN 10088-1-X2CrNiMo17-12-2 (1.4404)	AISI 316L
6	Shaft extension	Stainless steel	EN 10088-1-X2CrNiMo17-12-2 (1.4404)	AISI 316L
8	Impeller lock nut and washer	Stainless steel	EN 10088-1-X2CrNiMo17-12-2 (1.4404)	AISI 316L
9	Tab	Stainless steel	EN 10088-1-X2CrNiMo17-12-2 (1.4404)	AISI 316L
10	Fill and drain plugs	Stainless steel	EN 10088-3-X8CrNiS18-9 (1.4305)	AISI 303
11	Fill and drain plugs seals	EPDM (standard version)		
12	Mechanical seal	Carbon / Silicon carbide / EPDM (standard version)		
13	O-Ring	EPDM (standard version)		
16	Pump body fastening bolts and screws	Galvanized steel		

Nsc2-en_b_tm

NSCS SERIES
ELECTRIC PUMP CROSS-SECTION AND MAIN COMPONENTS

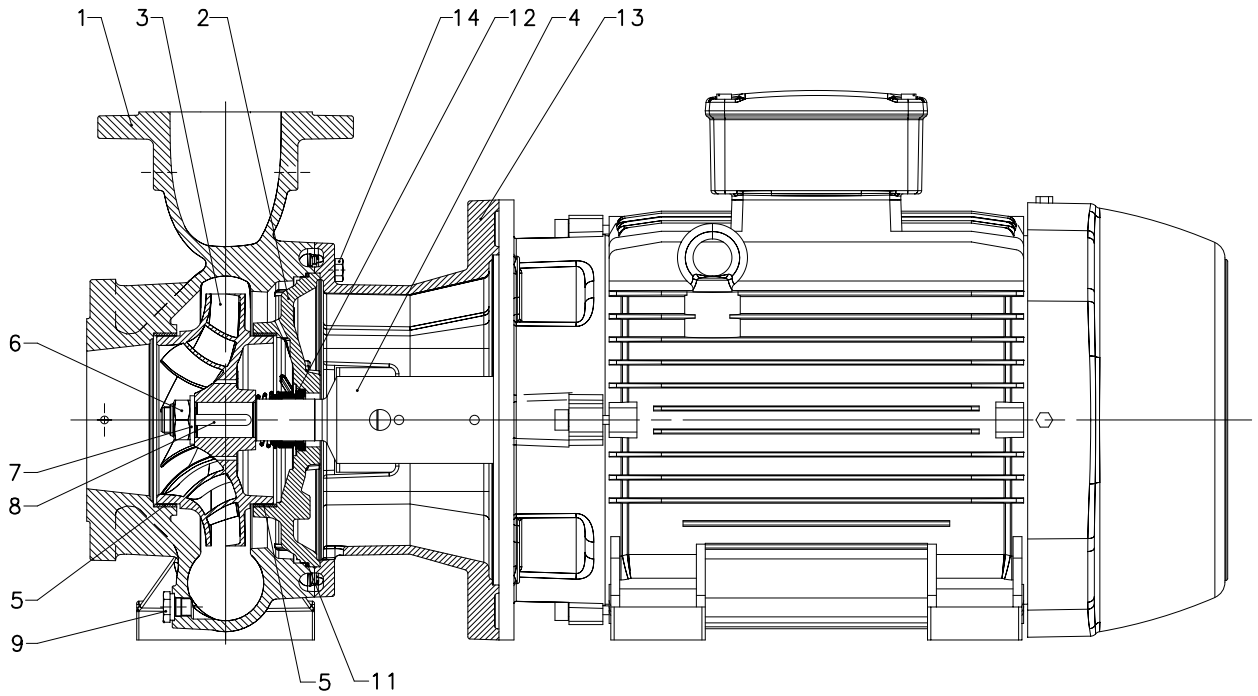

PUMP SIZE				
32-125	40-125	50-125	65-125	80-160
32-160	40-160	50-160	65-160	80-200
32-200	40-200	50-200	65-200	80-250
32-250	40-250	50-250	65-250	

NSCS32-80_A_DS

REF. N.	PART	MATERIAL	REFERENCE STANDARDS	
			EUROPE	USA
1	Volute casing	Cast iron	EN 1561 - GJL-250 (JL1040)	ASTM Class 35
	Volute casing (65, 80)	Stainless steel	EN 10213-GX5CrNiMo-19-11-2 (1.4408)	ASTM A743 CF8M
		Duplex	EN 10213-GX2CrNiMoCuN25-6-3-3 (1.4517)	ASTM A743 CD4MCu
2	Casing cover	Cast iron	EN 1561 - GJL-250 (JL1040)	ASTM Class 35
	Casing cover (65, 80)	Stainless steel	EN 10213-GX5CrNiMo-19-11-2 (1.4408)	ASTM A743 CF8M
		Duplex	EN 10213-GX2CrNiMoCuN25-6-3-3 (1.4517)	ASTM A743 CD4MCu
3	Impeller (32, 40, 50)	Stainless steel	EN 10088-1-X5CrNi18-10 (1.4301)	AISI 304
	Impeller (65, 80)	Cast iron	EN 1561 - GJL-200 (JL1030)	ASTM Class 30
		Bronze	EN 1982 - CuSn10-C (CC480K)	UNS C90700
		Stainless steel	EN 10213-GX5CrNiMo-19-11-2 (1.4408)	ASTM A743 CF8M
		Duplex	EN 10213-GX2CrNiMoCuN25-6-3-3 (1.4517)	ASTM A743 CD4MCu
4	Stub shaft	Stainless steel	EN 10088-1-X2CrNiMo17-12-2 (1.4404)	AISI 316L
	Stub shaft (65-250, 80-200, 80-250)	Stainless steel	EN 10088-1-X17CrNi16-2 (1.4057)	AISI 431
	Stub shaft (65, 80)	Duplex	EN 10088-3-X2CrNiMoN22-5-3 (1.4462)	ASTM A182 F51
5	Wear ring	Stainless steel	EN 10088-1-X5CrNi18-10 (1.4301)	AISI 304
	Wear ring (65, 80)	Duplex	EN 10088-3-X2CrNiMoN22-5-3 (1.4462)	ASTM A182 F51
6	Impeller lock nut and washer	Stainless steel	EN 10088-1-X5CrNi18-10 (1.4301)	AISI 304
	Impeller lock nut and washer (65, 80)	Duplex	EN 10088-3-X2CrNiMoN22-5-3 (1.4462)	ASTM A182 F51
8	Impeller key	Stainless steel	EN 10088-1-X2CrNiMo17-12-2 (1.4404)	AISI 316L
	Impeller key (65, 80)	Duplex	EN 10088-3-X2CrNiMoN22-5-3 (1.4462)	ASTM A182 F51
9	Fill and drain plugs	Stainless steel	EN 10088-3-X8CrNiS18-9 (1.4305)	AISI 303
	Fill and drain plugs (65, 80)	Duplex	EN 10088-3-X2CrNiMoN22-5-3 (1.4462)	ASTM A182 F51
11	O-Ring	EPDM (versione standard)		
12	Mechanical seal	Carbon / Silicon carbide / EPDM (standard version)		
13	Mechanical seal (65, 80)	Antimony impregnated carbon / Silicon carbide / EPDM (duplex version)		
13	Adapter *	Aluminium	EN 1706-AC-AlSi11Cu2 (Fe) (AC46100)	-
	Adapter	Cast iron	EN 1561 - GJL-250 (JL1040)	ASTM Class 35
	Motor adapter	Cast iron	EN 1561 - GJL-250 (JL1040)	ASTM Class 35
14	Volute casing fastening bolts and screws	Galvanized steel		
	Volute casing fastening bolts and screws	Stainless steel	A4 (~ 1.4401)	

* 2/4 pole: 32/40/50-125, 32/40-160

Nscs32-80-en_c_tm

NSCS SERIES
ELECTRIC PUMP CROSS-SECTION AND MAIN COMPONENTS

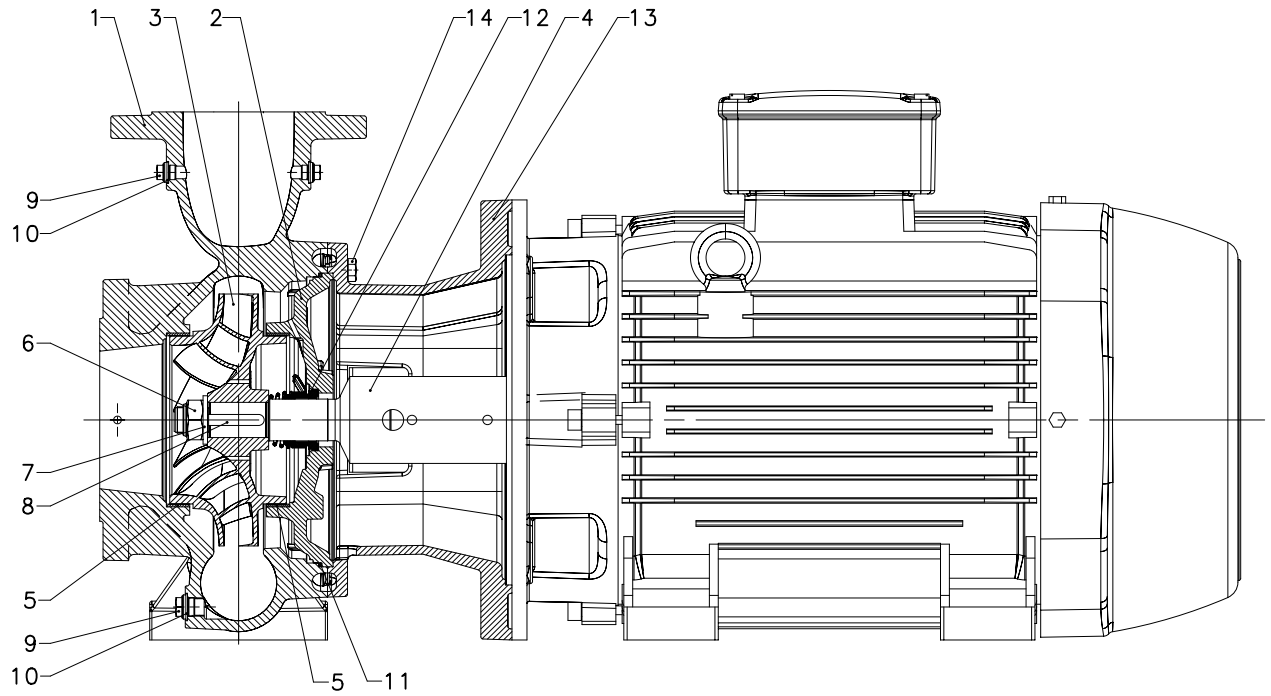

PUMP SIZE					
50-315	65-315	80-316	80-315	80-400	100-160
100-200	100-250	100-315	100-316	100-400	125-200
125-250	125-315	125-400	150-200	150-250	150-315
150-400	200-250	200-315	250-315		

NSCS100-200_A_DS

REF. N.	PART	MATERIAL	REFERENCE STANDARDS	
			EUROPE	USA
1	Volute casing	Cast iron	EN 1561 - GJL-250 (JL1040)	ASTM Class 35
		Stainless steel	EN 10213-GX5CrNiMo-19-11-2 (1.4408)	ASTM A743 CF8M
		Duplex	EN 10213-GX2CrNiMoCuN25-6-3-3 (1.4517)	ASTM A743 CD4MCu
	Volute casing (200-250, 200-315, 250-315)	Cast ductile iron	EN 1563 - EN-GJS400-15 (EN-JS1030)	ASTM A536 40-60-18
2	Casing cover	Cast iron	EN 1561 - GJL-250 (JL1040)	ASTM Class 35
		Stainless steel	EN 10213-GX5CrNiMo-19-11-2 (1.4408)	ASTM A743 CF8M
		Duplex	EN 10213-GX2CrNiMoCuN25-6-3-3 (1.4517)	ASTM A743 CD4MCu
	Casing cover (200-250, 200-315, 250-315)	Cast ductile iron	EN 1563 - EN-GJS400-15 (EN-JS1030)	ASTM A536 40-60-18
3	Impeller	Cast iron	EN 1561 - GJL-200 (JL1030)	ASTM Class 30
		Bronzo	EN 1982 - CuSn10-C (CC480K)	UNS C90700
		Stainless steel	EN 10213-GX5CrNiMo-19-11-2 (1.4408)	ASTM A743 CF8M
		Duplex	EN 10213-GX2CrNiMoCuN25-6-3-3 (1.4517)	ASTM A743 CD4MCu
4	Stub shaft	Stainless steel	EN 10088-1-X17CrNi16-2 (1.4057)	AISI 431
		Duplex	EN 10088-3-X2CrNiMoN22-5-3 (1.4462)	ASTM A182 F51
5	Wear ring	Stainless steel	EN 10088-1-X5CrNi18-10 (1.4301)	AISI 304
		Duplex	EN 10088-3-X2CrNiMoN22-5-3 (1.4462)	ASTM A182 F51
6	Impeller nut	Stainless steel	A4 (~ 1.4401)	
		Duplex	EN 10088-3-X2CrNiMoN22-5-3 (1.4462)	ASTM A182 F51
7	Impeller washer	Stainless steel	A4 (~ 1.4401)	
		Duplex	EN 10088-3-X2CrNiMoN22-5-3 (1.4462)	ASTM A182 F51
8	Impeller key	Stainless steel	EN 10088 - X6CrNiMo17-12-2 (1.4571)	AISI 316Ti
		Duplex	EN 10088-3-X2CrNiMoN22-5-3 (1.4462)	ASTM A182 F51
9	Plug	Stainless steel	EN 10088 - X6CrNiMo17-12-2 (1.4571)	AISI 316Ti
		Duplex	EN 10088-3-X2CrNiMoN22-5-3 (1.4462)	ASTM A182 F51
10	Gasket	Asbestos-free synthetic fiber AFM 34		
11	O-Ring	EPDM (versione standard)		
12	Mechanical seal	Carbon / Silicon carbide / EPDM (standard version)		
		Antimony impregnated carbon / Silicon carbide / EPDM (duplex version)		
13	Motor adapter	Cast iron	EN 1561 - GJL-250 (JL1040)	ASTM Class 35
14	Volute - casing fastening screws	Carbon steel		
		Stainless steel	A4	

Nscs100-200-en_c_tm

NSC, NSCF, NSCC SERIES
ELECTRIC PUMP CROSS-SECTION AND MAIN COMPONENTS

PUMP SIZE
32-125
32-160
32-200
32-250
40-125
40-160
40-200
40-250
50-125
50-160
50-200
50-250
65-125
65-160
65-200
65-250
80-160
80-200
80-250

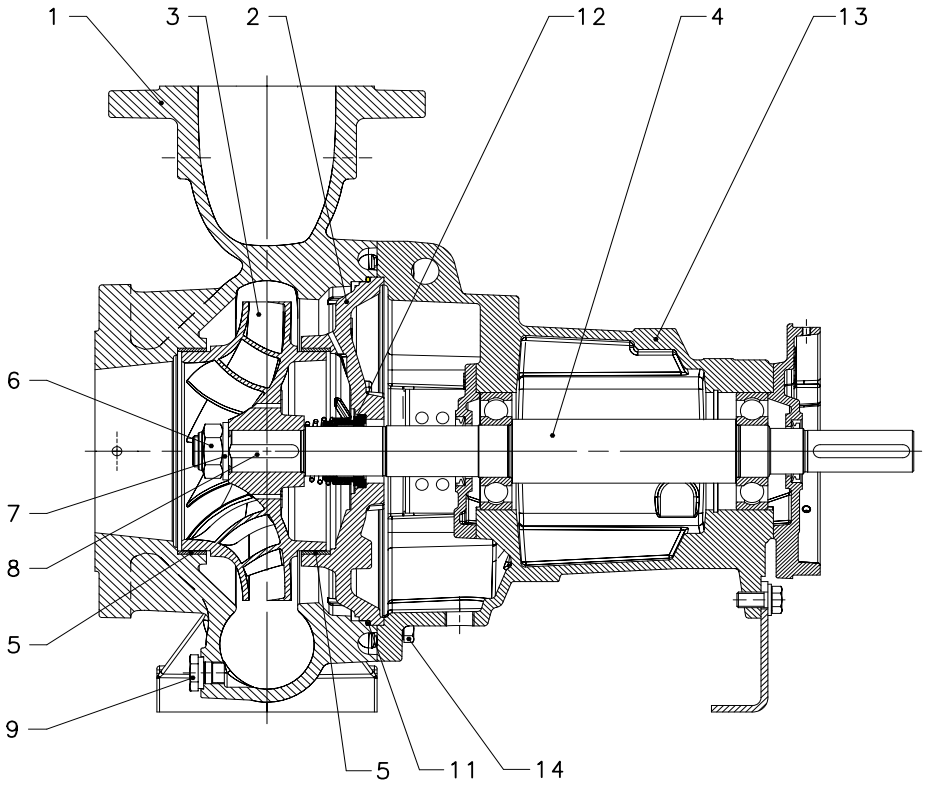

NSC32-80_A_DS

REF. N.	PART	MATERIAL	REFERENCE STANDARDS	
			EUROPE	USA
1	Volute casing	Cast iron	EN 1561 - GJL-250 (JL1040)	ASTM Class 35
	Volute casing (65, 80)	Stainless steel	EN 10213-GX5CrNiMo-19-11-2 (1.4408)	ASTM A743 CF8M
		Duplex	EN 10213-GX2CrNiMoCuN25-6-3-3 (1.4517)	ASTM A743 CD4MCu
2	Casing cover	Cast iron	EN 1561 - GJL-250 (JL1040)	ASTM Class 35
	Casing cover (65, 80)	Stainless steel	EN 10213-GX5CrNiMo-19-11-2 (1.4408)	ASTM A743 CF8M
		Duplex	EN 10213-GX2CrNiMoCuN25-6-3-3 (1.4517)	ASTM A743 CD4MCu
3	Impeller (32, 40, 50)	Stainless steel	EN 10088-1-X5CrNi18-10 (1.4301)	AISI 304
	Impeller (65, 80)	Cast iron	EN 1561 - GJL-200 (JL1030)	ASTM Class 30
		Bronze	EN 1982 - CuSn10-C (CC480K)	UNS C90700
		Stainless steel	EN 10213-GX5CrNiMo-19-11-2 (1.4408)	ASTM A743 CF8M
		Duplex	EN 10213-GX2CrNiMoCuN25-6-3-3 (1.4517)	ASTM A743 CD4MCu
4	Stub shaft	Stainless steel	EN 10088-1-X2CrNiMo17-12-2 (1.4404)	AISI 316L
	Stub shaft (65-250, 80-200, 80-250)	Stainless steel	EN 10088-1-X17CrNi16-2 (1.4057)	AISI 431
	Stub shaft (65, 80)	Duplex	EN 10088-3-X2CrNiMoN22-5-3 (1.4462)	ASTM A182 F51
5	Wear ring	Stainless steel	EN 10088-1-X5CrNi18-10 (1.4301)	AISI 304
	Wear ring (65, 80)	Duplex	EN 10088-3-X2CrNiMoN22-5-3 (1.4462)	ASTM A182 F51
6	Impeller lock nut and washer	Stainless steel	EN 10088-1-X5CrNi18-10 (1.4301)	AISI 304
	Impeller lock nut and washer (65, 80)	Duplex	EN 10088-3-X2CrNiMoN22-5-3 (1.4462)	ASTM A182 F51
8	Impeller key	Stainless steel	EN 10088-1-X2CrNiMo17-12-2 (1.4404)	AISI 316L
	Impeller key (65, 80)	Duplex	EN 10088-3-X2CrNiMoN22-5-3 (1.4462)	ASTM A182 F51
9	Fill and drain plugs	Stainless steel	EN 10088-3-X8CrNiS18-9 (1.4305)	AISI 303
	Fill and drain plugs (65, 80)	Duplex	EN 10088-3-X2CrNiMoN22-5-3 (1.4462)	ASTM A182 F51
11	O-Ring	EPDM (versione standard)		
12	Mechanical seal	Carbon / Silicon carbide / EPDM (standard version)		
13	Mechanical seal (65, 80)	Antimony impregnated carbon / Silicon carbide / EPDM (duplex version)		
13	Adapter *	Aluminium	EN 1706-AC-AlSi11Cu2 (Fe) (AC46100)	-
	Adapter	Cast iron	EN 1561 - GJL-250 (JL1040)	ASTM Class 35
	Motor adapter	Cast iron	EN 1561 - GJL-250 (JL1040)	ASTM Class 35
14	Volute casing fastening bolts and screws	Galvanized steel		
	Volute casing fastening bolts and screws	Stainless steel	A4 (~ 1.4401)	

* 2/4 pole: 32/40/50-125, 32/40-160

Nscs32-80-en_c_tm

NSC, NSCF, NSCC SERIES
ELECTRIC PUMP CROSS-SECTION AND MAIN COMPONENTS

PUMP SIZE
50-315
65-315
80-315
80-316
80-400
100-160
100-200
100-250
100-315
100-316
100-400
125-200
125-250
125-315
125-400
150-200
150-250
150-315
150-400
200-250
200-315
250-315

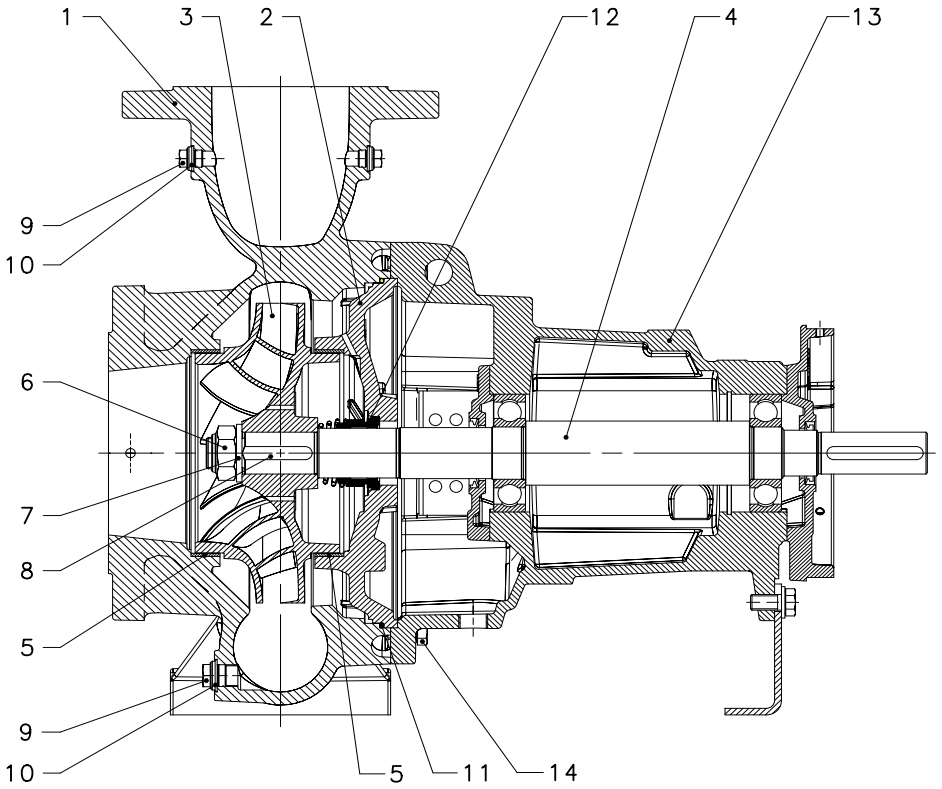

NSC100-200_A_DS

REF. N.	PART	MATERIAL	REFERENCE STANDARDS	
			EUROPE	USA
1	Volute casing	Cast iron	EN 1561 - GJL-250 (JL1040)	ASTM Class 35
		Stainless steel	EN 10213-GX5CrNiMo-19-11-2 (1.4408)	ASTM A743 CF8M
		Duplex	EN 10213-GX2CrNiMoCuN25-6-3-3 (1.4517)	ASTM A743 CD4MCu
	Volute casing (200-250, 200-315, 250-315)	Cast ductile iron	EN 1563 - EN-GJS400-15 (EN-JS1030)	ASTM A536 40-60-18
2	Casing cover	Cast iron	EN 1561 - GJL-250 (JL1040)	ASTM Class 35
		Stainless steel	EN 10213-GX5CrNiMo-19-11-2 (1.4408)	ASTM A743 CF8M
		Duplex	EN 10213-GX2CrNiMoCuN25-6-3-3 (1.4517)	ASTM A743 CD4MCu
	Casing cover (200-250, 200-315, 250-315)	Cast ductile iron	EN 1563 - EN-GJS400-15 (EN-JS1030)	ASTM A536 40-60-18
3	Impeller	Cast iron	EN 1561 - GJL-200 (JL1030)	ASTM Class 30
		Bronze	EN 1982 - CuSn10-C (CC480K)	UNS C90700
		Stainless steel	EN 10213-GX5CrNiMo-19-11-2 (1.4408)	ASTM A743 CF8M
		Duplex	EN 10213-GX2CrNiMoCuN25-6-3-3 (1.4517)	ASTM A743 CD4MCu
4	Shaft	Stainless steel	EN 10088-1-X17CrNi16-2 (1.4057)	AISI 431
		Duplex	EN 10088-3-X2CrNiMoN22-5-3 (1.4462)	ASTM A182 F51
5	Wear ring	Stainless steel	EN 10088-1-X5CrNi18-10 (1.4301)	AISI 304
		Duplex	EN 10088-3-X2CrNiMoN22-5-3 (1.4462)	ASTM A182 F51
6	Impeller nut	Stainless steel	A4 (~ 1.4401)	
		Duplex	EN 10088-3-X2CrNiMoN22-5-3 (1.4462)	ASTM A182 F51
7	Impeller washer	Stainless steel	A4 (~ 1.4401)	
		Duplex	EN 10088-3-X2CrNiMoN22-5-3 (1.4462)	ASTM A182 F51
8	Impeller key	Stainless steel	EN 10088 - X6CrNiMo17-12-2 (1.4571)	AISI 316Ti
		Duplex	EN 10088-3-X2CrNiMoN22-5-3 (1.4462)	ASTM A182 F51
9	Plug	Stainless steel	EN 10088 - X6CrNiMo17-12-2 (1.4571)	AISI 316Ti
		Duplex	EN 10088-3-X2CrNiMoN22-5-3 (1.4462)	ASTM A182 F51
10	Gasket	Asbestos-free synthetic fiber AFM 34		
11	O-Ring	EPDM (standard version)		
12	Mechanical seal	Carbon / Silicon carbide / EPDM (standard version)		
		Antimony impregnated carbon / Silicon carbide / EPDM (duplex version)		
13	Bearing bracket	Cast iron	EN 1561 - GJL-250 (JL1040)	ASTM Class 35
14	Volute - casing fastening screws	Carbon steel		
		Stainless steel	A4 (~ 1.4401)	

NSC, NSCF, NSCC SERIES
ELECTRIC PUMP CROSS-SECTION AND MAIN COMPONENTS

PUMP SIZE
150-500
200-400
200-500
250-400
250-500
300-350
300-400
300-450

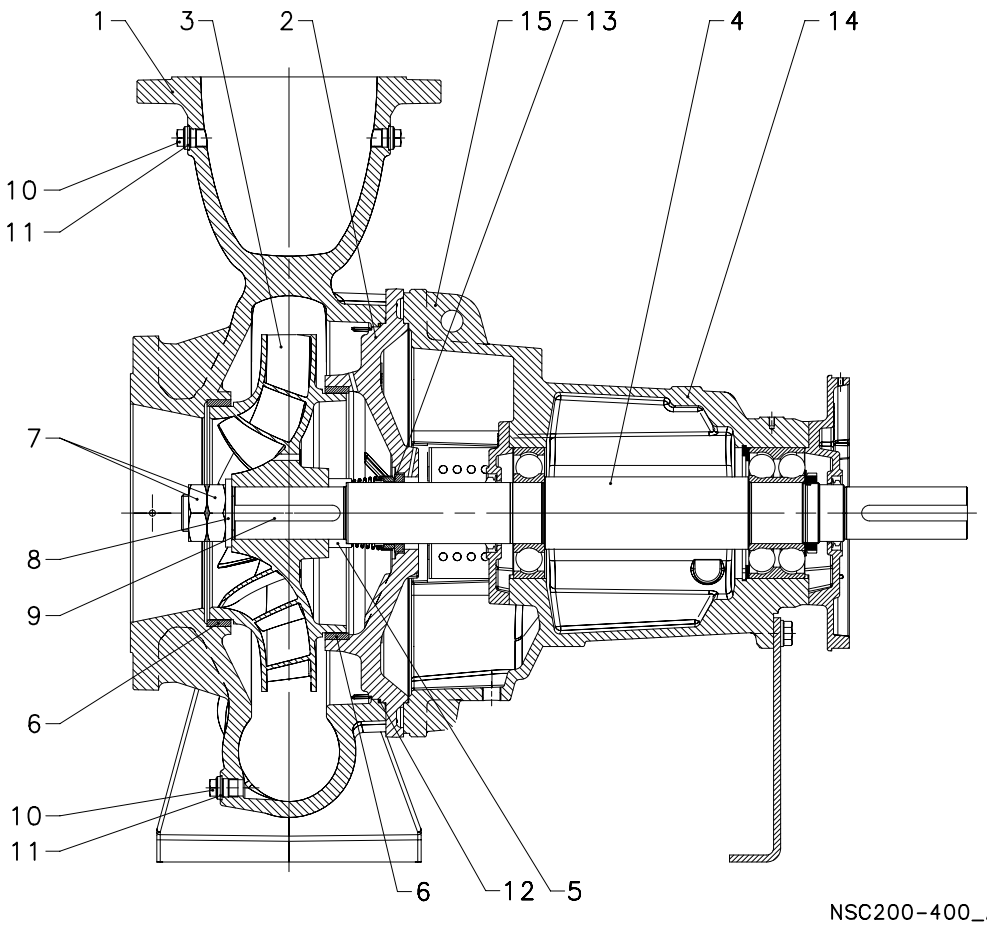

REF. N.	PART	MATERIAL	REFERENCE STANDARDS	
			EUROPE	USA
1	Volute casing	Cast ductile iron	EN 1563 - EN-GJS400-15 (EN-JS1030)	ASTM A536 40-60-18
		Duplex	EN 10213-GX2CrNiMoCuN25-6-3-3 (1.4517)	ASTM A743 CD4MCu
2	Casing cover	Cast ductile iron	EN 1563 - EN-GJS400-15 (EN-JS1030)	ASTM A536 40-60-18
		Duplex	EN 10213-GX2CrNiMoCuN25-6-3-3 (1.4517)	ASTM A743 CD4MCu
3	Impeller	Cast iron	EN 1561 - GJL-200 (JL1030)	ASTM Class 30
		Bronze	EN 1982 - CuSn10-C (CC480K)	UNS C90700
		Stainless steel	EN 10213-GX5CrNiMo-19-11-2 (1.4408)	ASTM A743 CF8M
		Duplex	EN 10213-GX2CrNiMoCuN25-6-3-3 (1.4517)	ASTM A743 CD4MCu
4	Shaft	Stainless steel	EN 10088-1-X17CrNi16-2 (1.4057)	AISI 431
		Duplex	EN 10088-3-X2CrNiMoN22-5-3 (1.4462)	ASTM A182 F51
5	Spacer ring	Stainless steel	EN 10088-1-X17CrNi16-2 (1.4057)	AISI 431
		Duplex	EN 10088-3-X2CrNiMoN22-5-3 (1.4462)	ASTM A182 F51
6	Wear ring	Stainless steel	EN 10088-X5CrNi18-10 (1.4301)	AISI 304
		Duplex	EN 10088-3-X2CrNiMoN22-5-3 (1.4462)	ASTM A182 F51
7	Impeller nut	Stainless steel	A4 (~ 1.4401)	
		Duplex	EN 10088-3-X2CrNiMoN22-5-3 (1.4462)	ASTM A182 F51
8	Impeller washer	Stainless steel	A4 (~ 1.4401)	
		Duplex	EN 10088-3-X2CrNiMoN22-5-3 (1.4462)	ASTM A182 F51
9	Impeller key	Stainless steel	EN 10088 - X6CrNiMo17-12-2 (1.4571)	AISI 316Ti
		Duplex	EN 10088-3-X2CrNiMoN22-5-3 (1.4462)	ASTM A182 F51
10	Plug	Stainless steel	EN 10088 - X6CrNiMo17-12-2 (1.4571)	AISI 316Ti
		Duplex	EN 10088-3-X2CrNiMoN22-5-3 (1.4462)	ASTM A182 F51
11	Gasket	Asbestos-free synthetic fiber AFM 34		
12	O-Ring	EPDM (standard version)		
13	Mechanical seal	Carbon / Silicon carbide / EPDM (standard version)		
		Carbon / Silicon carbide / EPDM (standard version)		
14	Bearing bracket	Cast iron	EN 1561 - GJL-250 (JL1040)	ASTM Class 35
15	Volute - casing fastening screws	Cast iron		
		Stainless steel	A4 (~ 1.4401)	

e-NSC SERIES
MECHANICAL SEALS

Elastomer bellow seal with mounting dimensions according to EN 12756 and ISO 3069

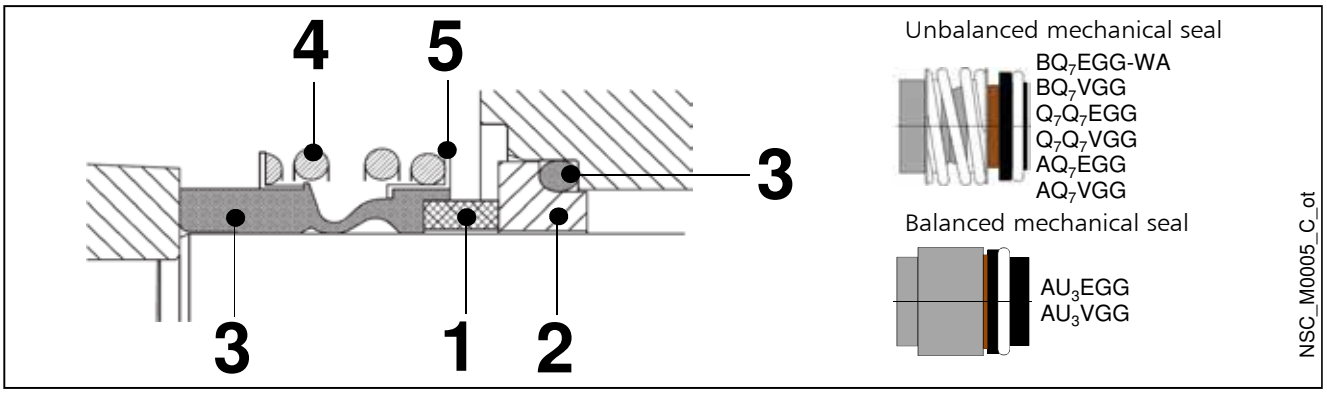

POSITION 1 - 2	POSITION 3	POSITION 4 - 5
B : Resin impregnated carbon	**E** : EPDM	**G** : AISI 316
A : Antimony impregnated carbon	**V** : FKM (FPM)	
Q_7 : Silicon carbide		
U_3 : Tungsten carbide		

nsc_ten-mec-en_a_tm

TYPE	POSITION 1 ROTATING ASSEMBLY	2 FIXED ASSEMBLY	3 ELASTOMERS	4 SPRINGS	5 OTHER COMPONENTS	PRESSURE (bar)	RANGE TEMPERATURE (°C)
STANDARD MECHANICAL SEAL							
B Q7 E G G - WA	B	Q_7	E	G	G	16/10	-25 … +90/+120
OTHER TYPES OF MECHANICAL SEAL							
B Q7 V G G	B	Q_7	V	G	G	16	-20 … +120 *)
Q7 Q7 E G G - WA	Q_7	Q_7	E	G	G	16	-25 … +120
Q7 Q7 V G G	Q_7	Q_7	V	G	G	16	-20 … +120 *)
A Q7 E G G(Ø≤38)	A	Q_7	E	G	G	16	-25 … +140
A U3 E G G(Ø>38)	A	U_3	E	G	G	16	-25 … +140
A Q7 V G G(Ø≤38)	A	Q_7	V	G	G	16	-20 … +140 *)
A U3 V G G(Ø>38)	A	U_3	V	G	G	16	-20 … +140 *)

*) for hot water: max. +80 °C

nsc_tipi-ten-mec-en_c_tc

e-NSC SERIES
PRESSURE/TEMPERATURE APPLICATION LIMITS FOR COMPLETE PUMP

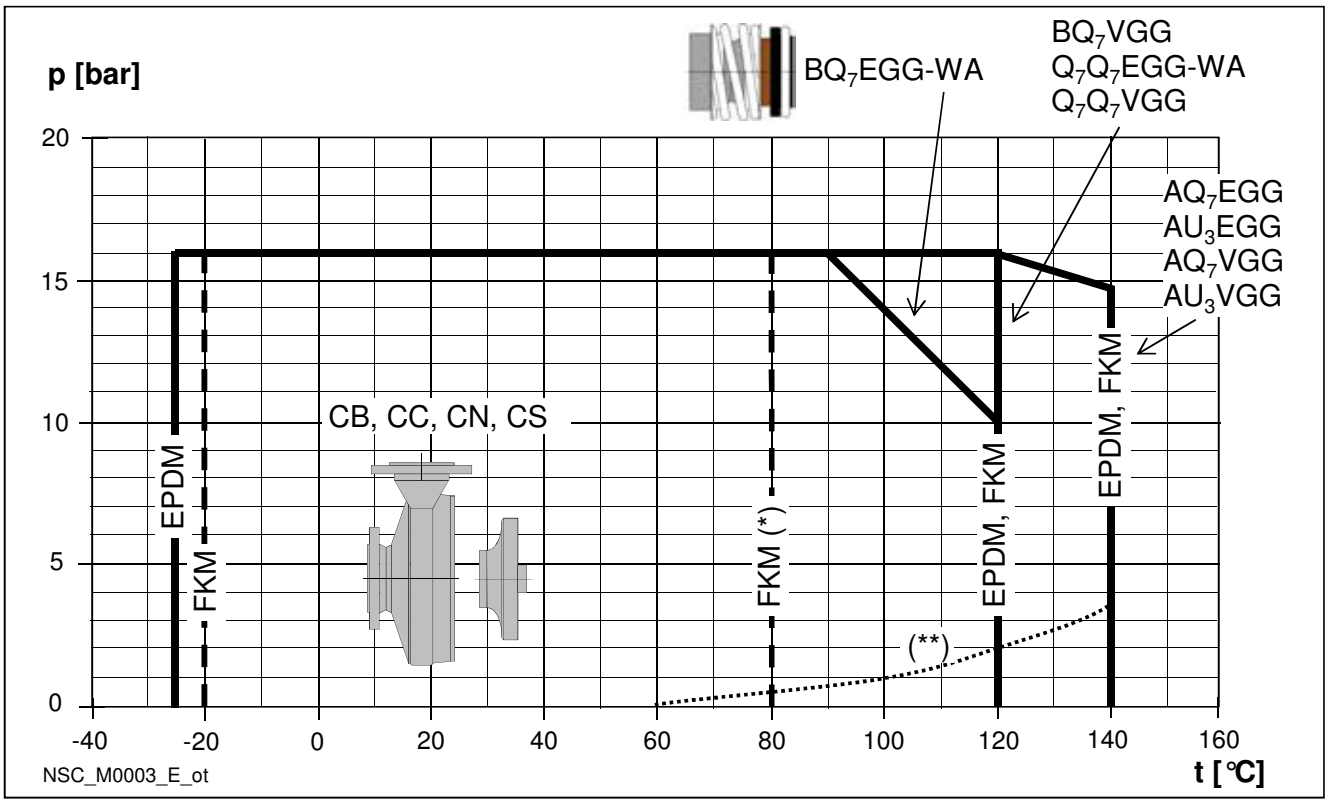

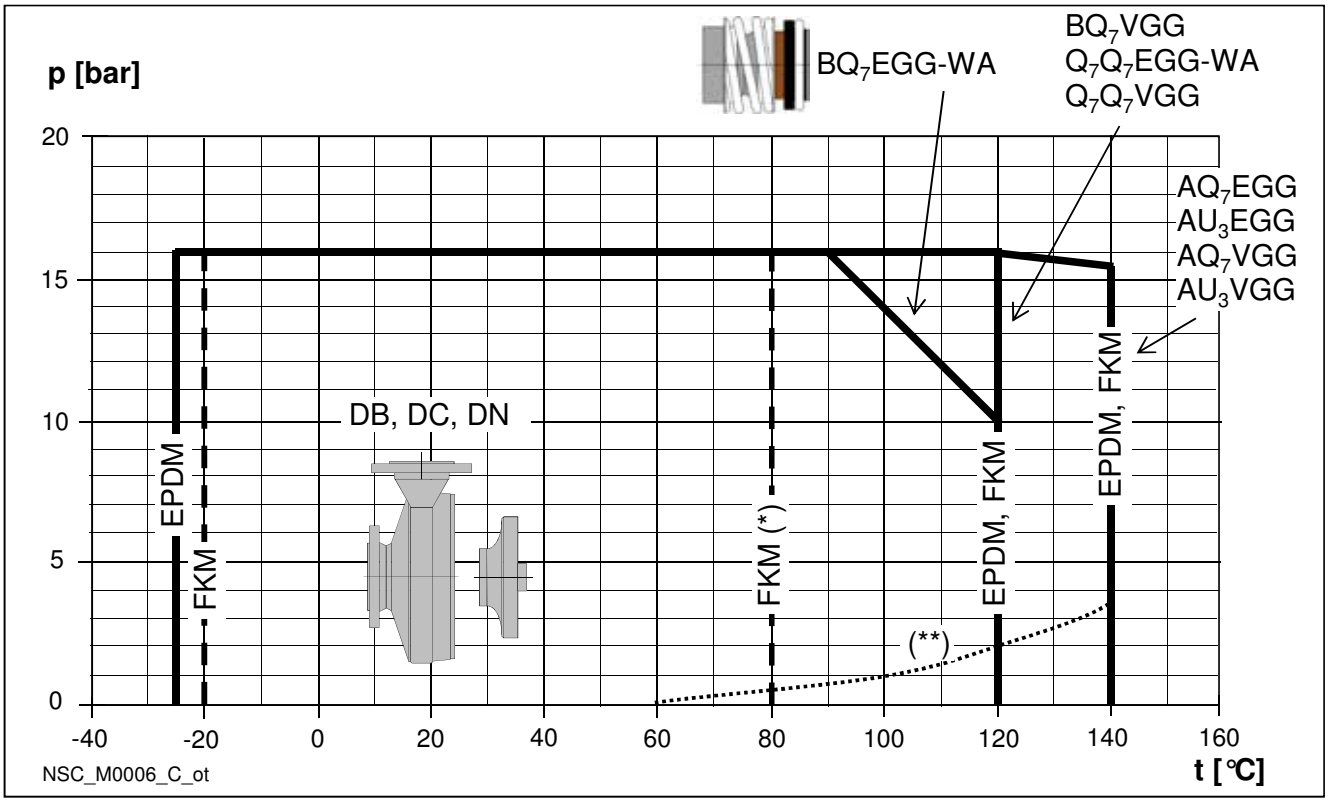

(*) hot water: max +80°C.
(**) minimum pressure required at mechanical seal (hot water; could be different in case of other liquids).

e-NSC SERIES
PRESSURE/TEMPERATURE APPLICATION LIMITS FOR COMPLETE PUMP

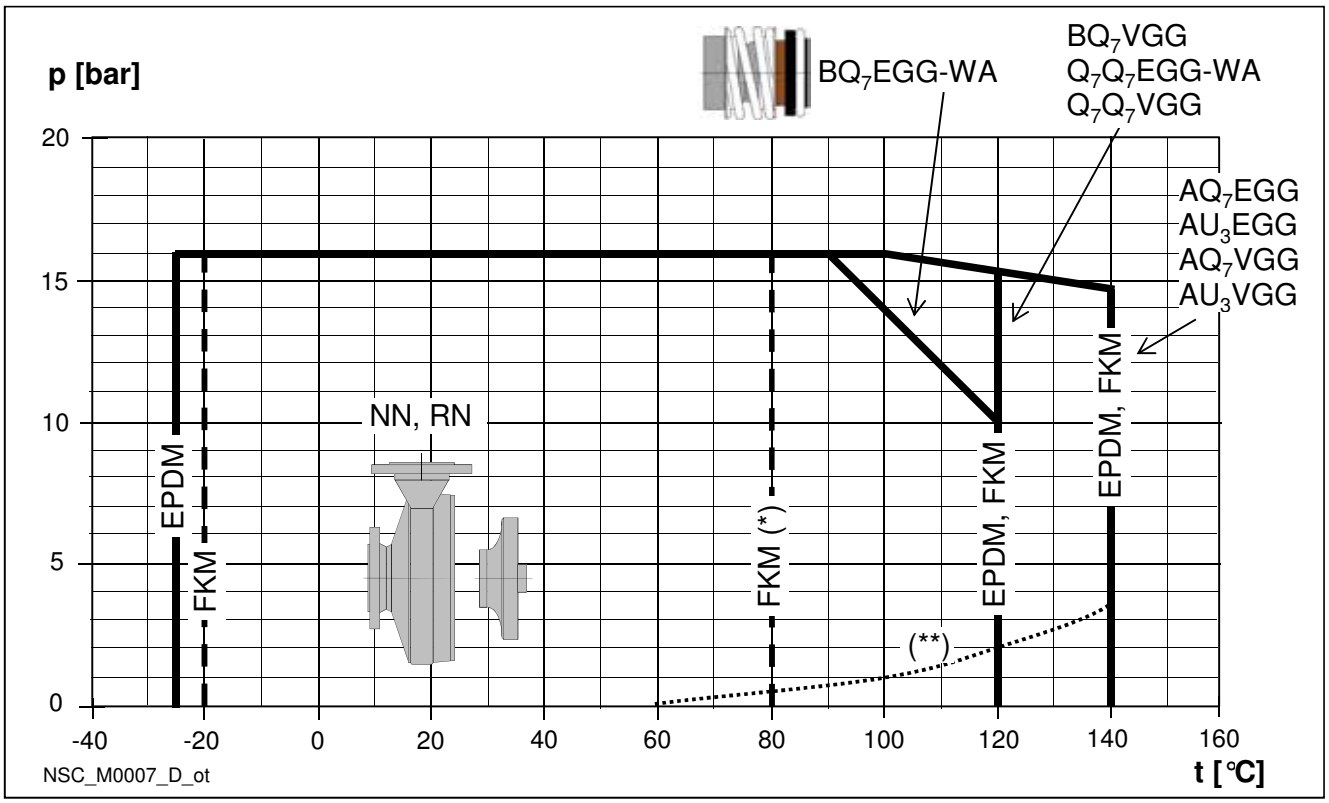

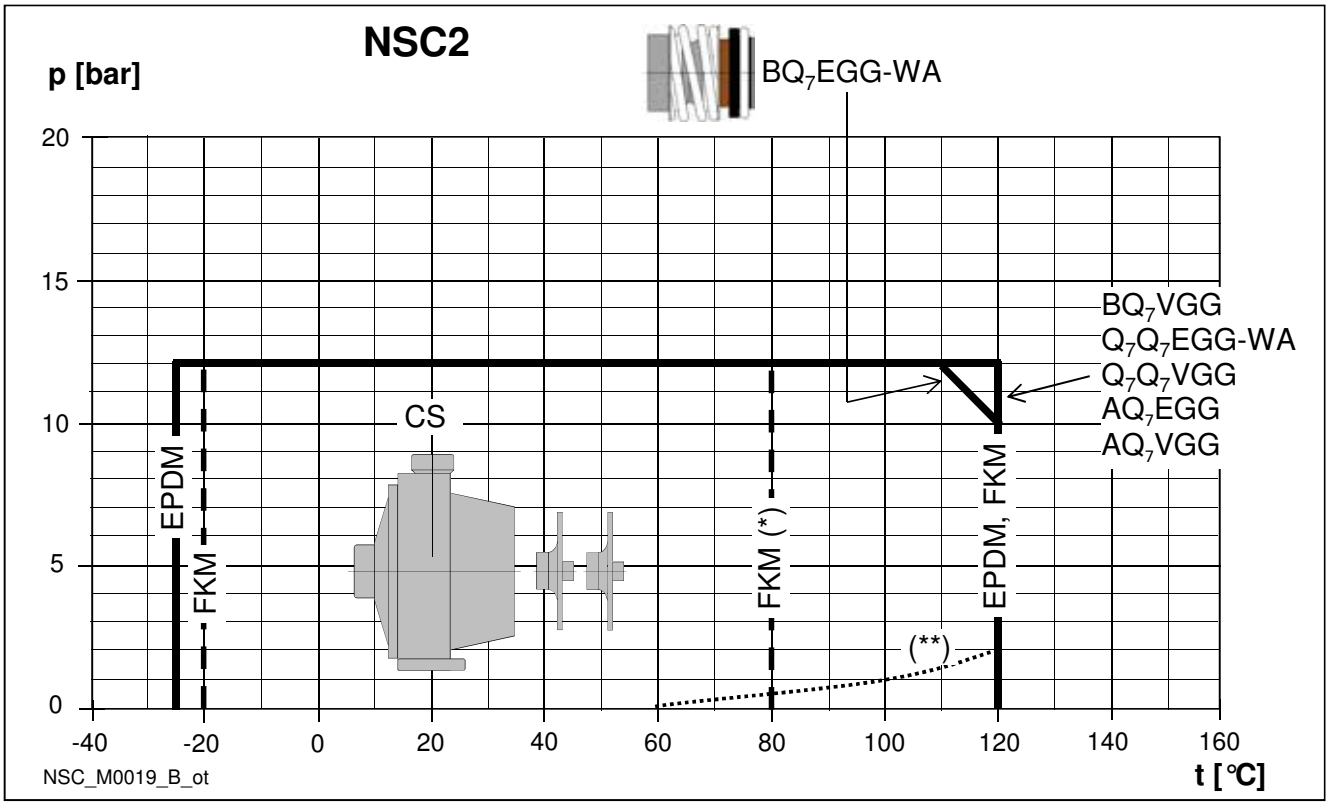

(*) hot water: max +80°C.
(**) minimum pressure required at mechanical seal (hot water; could be different in case of other liquids).

e-NSC SERIES
MECHANICAL SEALS FOR DUPLEX VERSION

Balanced metal bellows seal with mounting dimensions according to EN 12756 and ISO 3069

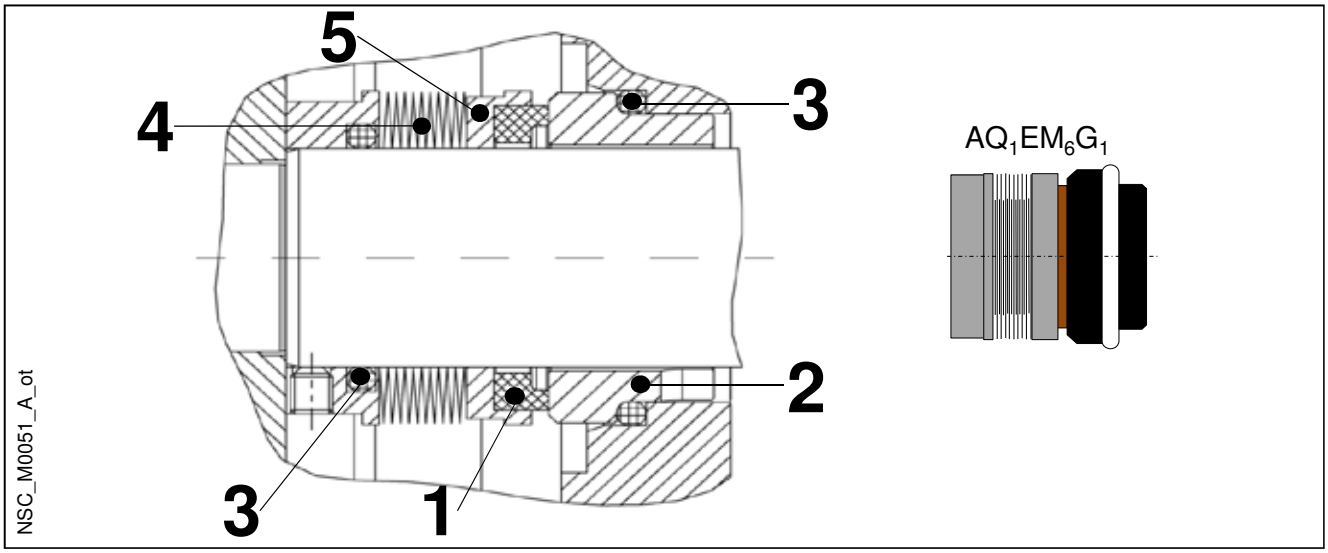

POSITION 1 - 2	POSITION 3	POSITION 4 - 5
A : Antimony impregnated carbon	**E** : EPDM	**M6** : Inconel® 718
Q1 : Silicon carbide		**G1** : Duplex

nsc_ten-mec_duplex-en_a_tm

TYPE	POSITION 1 ROTATING ASSEMBLY	2 FIXED ASSEMBLY	3 ELASTOMERS	4 SPRINGS	5 OTHER COMPONENTS	PRESSURE (bar)	RANGE TEMPERATURE (°C)
STANDARD MECHANICAL SEAL							
$A\ Q_1\ E\ M_6\ G_1$	A	Q_1	E	M_6	G_1	16	-25 ... +120

nsc_tipi-ten-mec-duplex-en_a_tc

PRESSURE/TEMPERATURE APPLICATION LIMITS FOR COMPLETE PUMP

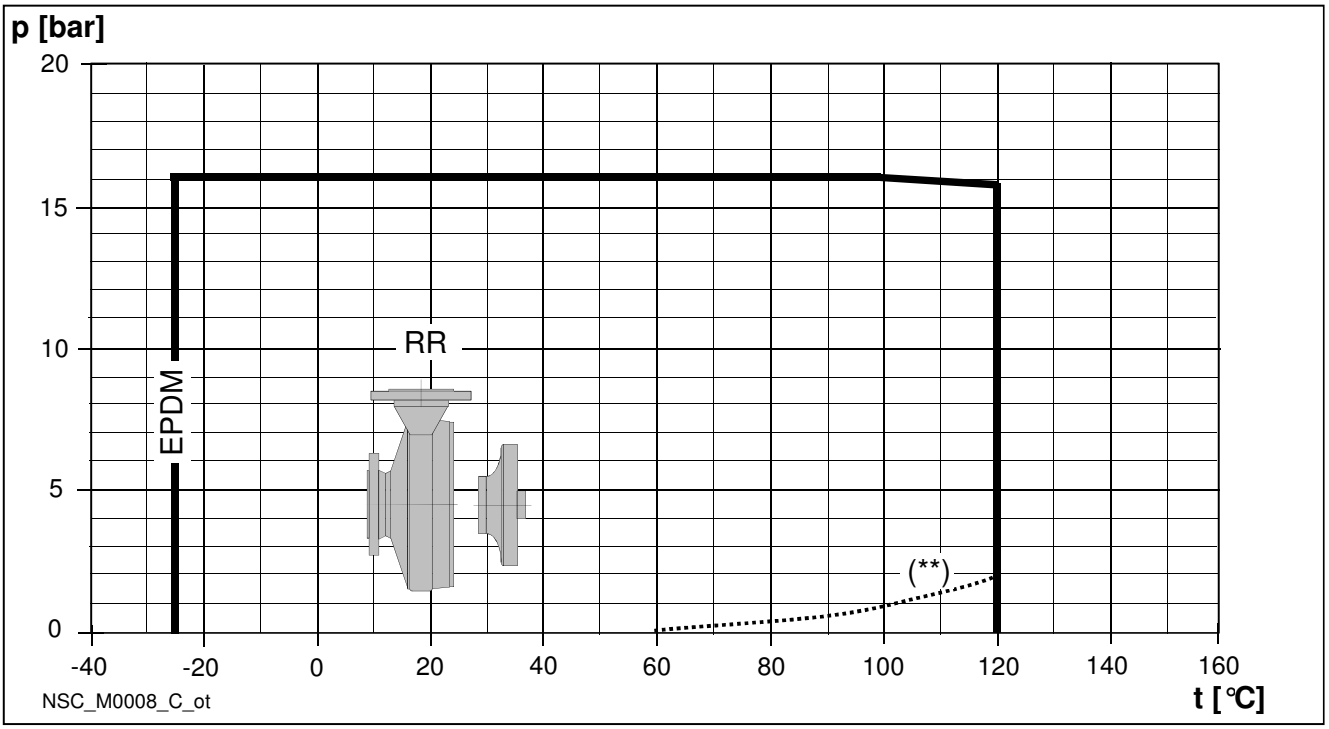

(**) minimum pressure required at mechanical seal (hot water; could be different in case of other liquids).

ErP 2009/125/EC

LOWARA
a xylem brand

e-NSC SERIES
MOTORS

With the "Energy using Products" (EuP 2005/32/EC) and "Energy related Products" (ErP 2009/125/EC) directives, the European Commission has established requirements for promoting the use of products with low power consumption.

The various products considered include **three-phase 50 Hz surface motors with power outputs ranging from 0,75 to 375 kW**, also when integrated with other products, with characteristics as defined by the specific **Regulations (EC) No 640/2009** and **(EU) No 4/2014** implementing the requirements of the EuP and ErP Directives.

In accordance with regulations, the **three-phase 50 Hz surface motors with power outputs ranging from 0,75 to 375 kW** should have IE3 as minimum level of efficiency (or IE2 fitted with variable speed drive).

- Short-circuit squirrel-cage motor, enclosed construction with external ventilation (TEFC).
- Rated power from 1,1 to 200 kW for 2-pole range and from 0,25 to 355 kW for 4-pole range.
- **IP55** protection degree.
- Insulation class **155 (F)**.
- **Standard** three-phase surface motors ≥ 0,75 kW supplied as **IE3**.
- IE efficiency level according to EN 60034-30:2009 and EN 60034-30-1:2014 (≥ 0,75 kW).
- Electrical performances according to EN 60034-1.
- Metric cable gland according to EN 50262.
- **Standard voltage**
  Single-phase version:
  220-240 V 50 Hz
  Built-in automatic reset overload protection.
  Three-phase version:
  220-240/380-415 V 50 Hz for power up to 3 kW.
  380-415/660-690 V 50 Hz for power above 3 kW.
  Overload protection to be provided by the user.
- **PTC included** as standard only for WEG motors (one per phase, 155°C).
- Maximum ambient temperature: 40 °C.

NSCE SERIES
SINGLE-PHASE MOTORS AT 50 Hz, 2 POLES

P_N kW	MOTOR TYPE	IEC SIZE*	Construction Design	INPUT CURRENT In (A) 220-240 V	CAPACITOR µF	CAPACITOR V	DATA FOR 230 V 50 Hz VOLTAGE min^{-1}	Is / In	η %	cosφ	Tn Nm	Ts/Tn	Tm/Tn
1,1	SM90RB14S2/1115	90R	B14	6,88-6,65	30	450	2800	3,89	74,7	0,96	3,75	0,46	1,72
1,5	SM90RB14S2/1155	90R	B14	9,21-8,58	40	450	2810	4,00	76,1	0,98	5,15	0,39	1,74
2,2	PLM90B14S2/1225	90	B14	12,5-11,6	70	450	2825	4,47	82,4	0,97	7,43	0,53	1,87

* R = Reduced size of motor casing as compared to shaft extension and flange.

Nsce-motm-2p50-en_a_te

LOWARA
a xylem brand

NSCE, NSC2 SERIES
THREE-PHASE MOTORS AT 50 Hz, 2 POLES

P_N	Efficiency η_N %																		IE	Year of manufacture
	Δ 220 V Y 380 V			Δ 230 V Y 400 V			Δ 240 V Y 415 V			Δ 380 V Y 660 V			Δ 400 V Y 690 V			Δ 415 V				
kW	4/4	3/4	2/4	4/4	3/4	2/4	4/4	3/4	2/4	4/4	3/4	2/4	4/4	3/4	2/4	4/4	3/4	2/4		
1,1	84,0	84,7	83,4	84,4	84,5	82,5	84,3	84,0	81,4	84,0	84,0	81,4	84,0	84,0	81,4	84,0	84,0	81,4	3	From 11/2014
1,5	85,6	86,5	85,8	85,9	86,4	84,9	86,0	86,0	84,0	85,6	86,0	84,0	85,6	86,0	84,0	85,6	86,0	84,0		
2,2	86,5	87,4	86,8	86,4	86,9	85,7	86,6	86,7	85,0	86,4	86,7	85,0	86,4	86,7	85,0	86,4	86,7	85,0		
3	87,2	88,5	88,3	87,5	88,2	87,5	87,5	87,8	86,4	87,2	87,8	86,4	87,2	87,8	86,4	87,2	87,8	86,4		
4	89,1	90,1	89,2	89,1	90,1	89,2	89,1	90,1	89,2	89,1	90,3	90,4	89,6	90,4	89,9	89,6	90,1	89,2		
5,5	89,5	89,6	88,0	89,5	89,6	88,0	89,5	89,6	88,0	89,5	90,3	89,9	89,7	90,0	89,0	89,6	89,6	88,0		
7,5	90,6	90,5	89,0	90,6	90,5	89,0	90,6	90,5	89,0	90,6	91,0	90,2	90,8	90,8	89,6	90,7	90,5	89,0		
9,2	90,8	91,0	89,7	90,8	91,0	89,7	90,8	91,0	89,7	90,8	91,4	90,8	91,1	91,3	90,3	91,1	91,0	89,7		
11	91,3	92,0	91,1	91,3	92,0	91,1	91,3	92,0	91,1	91,3	92,2	92,2	91,6	92,2	91,7	91,7	92,0	91,1		
15	92,5	92,4	91,2	92,5	92,4	91,2	92,5	92,4	91,2	92,7	93,3	92,9	93,1	93,3	92,7	92,5	92,4	91,2		
18,5	92,6	93,1	92,4	92,6	93,1	92,4	92,6	93,1	92,4	92,6	93,2	93,0	92,9	93,3	92,8	92,9	93,1	92,4		
22	93,0	92,7	91,3	93,0	92,7	91,3	93,0	92,7	91,3	93,0	93,2	92,4	93,1	93,0	91,9	93,0	92,7	91,3		

P_N	Manufacturer: Xylem Service Italia Srl, Reg. No. 07520560967, Montecchio Maggiore Vicenza - Italia. Model	IEC SIZE*	Construction Design	N. of Poles	f_N	Data for 400 V / 50 Hz Voltage				
kW					Hz	cosφ	Is / I_N	T_N Nm	Ts/T_N	Tm/Tn
1,1	SM90RB14S2/311 PE	90R	SPECIAL	2	50	0,79	8,31	3,63	3,95	3,95
1,5	SM90RB14S2/315 PE	90R				0,80	8,80	4,96	4,31	4,10
2,2	PLM90B14S2/322 E3	90				0,80	8,77	7,28	3,72	3,70
3	PLM90B14S2/330 E3	90				0,79	7,81	9,93	4,26	3,94
4	PLM112RB14S2/340 E3	112R				0,85	9,13	13,2	3,82	4,32
5,5	PLM1122FHE/355 E3	112				0,85	10,5	18,1	4,74	5,11
	PLM112B14S2/355 E3	112								
7,5	PLM1322FHE/375 E3	132				0,85	10,2	24,4	3,43	4,76
	PLM132B14S2/375 E3	132								
	PLM132B14S3/375 E3	132								
9,2	PLM132B14S2/392 E3	132				0,85	10,1	30,0	3,73	4,81
	PLM132B14S3/392 E3	132								
11	PLM132B14S2/3110 E3	132				0,86	9,89	35,9	3,46	4,59
	PLM132B14S3/3110 E3	132								
15	PLM160B34S3/3150 E3	160				0,88	9,51	48,6	2,73	4,32
18,5	PLM160B34S3/3185 E3	160				0,88	9,81	59,9	2,81	4,53
22	PLM160B34S3/3220 E3	160				0,85	10,9	71,1	3,26	5,12

P_N	Voltage U_N V										n_N	Observe the regulations and codes locally in force regarding sorted waste disposal.	Operating conditions **		
	Δ			Y			Δ			Y			Altitude Above Sea Level (m)	T. amb min/max °C	ATEX
	220 V	230 V	240 V	380 V	400 V	415 V	380 V	400 V	415 V	660 V	690 V				
kW	I_N (A)										min^{-1}				
1,1	4,19	4,14	4,16	2,42	2,39	2,40	2,41	2,38	2,38	1,39	1,37	2870 ÷ 2900	≤ 1000	-15 / 40	No
1,5	5,56	5,49	5,51	3,21	3,17	3,18	3,21	3,18	3,19	1,85	1,84	2870 ÷ 2895			
2,2	7,97	7,90	7,98	4,6	4,56	4,61	4,57	4,54	4,57	2,64	2,62	2880 ÷ 2900			
3	11,0	11,0	11,2	6,35	6,33	6,44	6,29	6,27	6,34	3,63	3,62	2865 ÷ 2895			
4	13,6	13,4	13,4	7,87	7,75	7,74	7,80	7,62	7,61	4,50	4,40	2885 ÷ 2910			
5,5	18,1	17,9	18,1	10,4	10,4	10,4	10,6	10,5	10,7	6,10	6,05	2880 ÷ 2910			
7,5	24,8	24,4	24,3	14,3	14,1	14,0	14,4	14,1	14,2	8,32	8,16	2920 ÷ 2935			
9,2	30,6	30,1	30,2	17,6	17,4	17,5	17,5	17,2	17,3	10,1	9,93	2920 ÷ 2935			
11	35,7	35,0	34,9	20,6	20,2	20,2	20,6	20,2	20,2	11,9	11,7	2910 ÷ 2930			
15	47,6	46,1	45,2	27,5	26,6	26,1	27,5	26,6	26,1	15,9	15,3	2940 ÷ 2950			
18,5	58,3	56,7	55,6	33,7	32,7	32,1	34,0	33,0	32,7	19,6	19,0	2940 ÷ 2950			
22	72,9	73,1	73,7	42,1	42,2	42,6	40,9	40,4	40,6	23,6	23,3	2950 ÷ 2960			

* R = Reduced size of motor casing as compared to shaft extension and flange.

Nsce-IE3-mott-2p50-en_a_te

** Operating conditions to be referred to motor only. About electric pump, refer to limits in user's manual.

LOWARA
a xylem brand

NSCS SERIES
THREE-PHASE MOTORS AT 50 Hz, 2 POLES (up to 22 kW)

P_N	Efficiency η_N %																		IE	Year of manufacture
	Δ 220 V Y 380 V			Δ 230 V Y 400 V			Δ 240 V Y 415 V			Δ 380 V Y 660 V			Δ 400 V Y 690 V			Δ 415 V				
kW	4/4	3/4	2/4	4/4	3/4	2/4	4/4	3/4	2/4	4/4	3/4	2/4	4/4	3/4	2/4	4/4	3/4	2/4		
1,1	84,0	84,7	83,4	84,4	84,5	82,5	84,3	84,0	81,4	84,0	84,0	81,4	84,0	84,0	81,4	84,0	84,0	81,4	3	From 11/2014
1,5	85,6	86,5	85,8	85,9	86,4	84,9	86,0	86,0	84,0	85,6	86,0	84,0	85,6	86,0	84,0	85,6	86,0	84,0		
2,2	86,5	87,4	86,8	86,4	86,9	85,7	86,6	86,7	85,0	86,4	86,7	85,0	86,4	86,7	85,0	86,4	86,7	85,0		
3	87,2	88,5	88,3	87,5	88,2	87,5	87,5	87,8	86,4	87,2	87,8	86,4	87,2	87,8	86,4	87,2	87,8	86,4		
4	89,1	90,1	89,2	89,1	90,1	89,2	89,1	90,1	89,2	89,1	90,3	90,4	89,6	90,4	89,9	89,6	90,1	89,2		
5,5	89,5	89,6	88,0	89,5	89,6	88,0	89,5	89,6	88,0	89,5	90,3	89,9	89,7	90,0	89,0	89,6	89,6	88,0		
7,5	90,6	90,5	89,0	90,6	90,5	89,0	90,6	90,5	89,0	90,6	91,0	90,2	90,8	90,8	89,6	90,7	90,5	89,0		
11	91,8	92,3	91,5	91,8	92,3	91,5	91,8	92,3	91,5	91,8	92,3	91,9	92,2	92,5	91,8	92,3	92,4	91,5		
15	92,5	92,4	91,2	92,5	92,4	91,2	92,5	92,4	91,2	92,7	93,3	92,9	93,1	93,3	92,7	92,5	92,4	91,2		
18,5	92,6	93,1	92,4	92,6	93,1	92,4	92,6	93,1	92,4	92,6	93,2	93,0	92,9	93,3	92,8	92,9	93,1	92,4		
22	93,0	92,7	91,3	93,0	92,7	91,3	93,0	92,7	91,3	93,0	93,2	92,4	93,1	93,0	91,9	93,0	92,7	91,3		

P_N	Manufacturer Xylem Service Italia Srl Reg. No. 07520560967 Montecchio Maggiore Vicenza - Italia	IEC SIZE*	Construction Design	N. of Poles	f_N	Data for 400 V / 50 Hz Voltage				
kW	Model				Hz	cosφ	Is / I_N	T_N Nm	Ts/T_N	Tm/Tn
1,1	SM80B5/311 PE	80	B5	2	50	0,79	8,31	3,63	3,95	3,95
1,5	SM90RB5/315 PE	90R				0,80	8,80	4,96	4,31	4,10
2,2	PLM90B5/322 E3	90				0,80	8,77	7,28	3,72	3,70
3	PLM100RB5/330 E3	100R				0,79	7,81	9,93	4,26	3,94
4	PLM112RB5/340 E3	112R				0,85	9,13	13,2	3,82	4,32
5,5	PLM132RB5/355 E3	132R				0,85	10,5	18,1	4,74	5,11
7,5	PLM132B5/375 E3	132				0,85	10,2	24,4	3,43	4,76
11	PLM160B35/3110 E3	160	B35			0,88	8,59	35,6	2,36	4,14
15	PLM160B35/3150 E3	160				0,88	9,51	48,6	2,73	4,32
18,5	PLM160B35/3185 E3	160				0,88	9,81	59,9	2,81	4,53
22	PLM180RB35/3220 E3	180R				0,85	10,9	71,1	3,26	5,12

P_N	Voltage U_N V											n_N	Observe the regulations and codes locally in force regarding sorted waste disposal.	Operating conditions **		
	Δ			Y			Δ			Y				Altitude Above Sea Level (m)	T. amb min/max °C	ATEX
kW	220 V	230 V	240 V	380 V	400 V	415 V	380 V	400 V	415 V	660 V	690 V	I_N (A)				
1,1	4,19	4,14	4,16	2,42	2,39	2,40	2,41	2,38	2,38	1,39	1,37	2870 ÷ 2900				
1,5	5,56	5,49	5,51	3,21	3,17	3,18	3,21	3,18	3,19	1,85	1,84	2870 ÷ 2895				
2,2	7,97	7,90	7,98	4,6	4,56	4,61	4,57	4,54	4,57	2,64	2,62	2880 ÷ 2900				
3	11,0	11,0	11,2	6,35	6,33	6,44	6,29	6,27	6,34	3,63	3,62	2865 ÷ 2895				
4	13,6	13,4	13,4	7,87	7,75	7,74	7,80	7,62	7,61	4,50	4,40	2885 ÷ 2910				
5,5	18,1	17,9	18,1	10,4	10,4	10,4	10,6	10,5	10,7	6,10	6,05	2880 ÷ 2910		≤ 1000	-15 / 40	No
7,5	24,8	24,4	24,3	14,3	14,1	14,0	14,4	14,1	14,2	8,32	8,16	2920 ÷ 2935				
11	35,0	33,9	33,0	20,2	19,6	19,1	20,4	19,6	19,2	11,8	13,3	2935 ÷ 2950				
15	47,6	46,1	45,2	27,5	26,6	26,1	27,5	26,6	26,1	15,9	15,3	2940 ÷ 2950				
18,5	58,3	56,7	55,6	33,7	32,7	32,1	34,0	33,0	32,7	19,6	19,0	2940 ÷ 2950				
22	72,9	73,1	73,7	42,1	42,2	42,6	40,9	40,4	40,6	23,6	23,3	2950 ÷ 2960				

* R = Reduced size of motor casing as compared to shaft extension and flange.

** Operating conditions to be referred to motor only. About electric pump, refer to limits in user's manual.

Nscs-IE3-mott-2p50-en_a_te

LOWARA
a xylem brand

NSCS SERIES
THREE-PHASE MOTORS AT 50 Hz, 2 POLES (from 30 to 90 kW)

P_N	Efficiency η_N %									IE	Year of manufacture
	Δ 380 V Y 660 V			Δ 400 V Y 690 V			Δ 415 V				
kW	4/4	3/4	2/4	4/4	3/4	2/4	4/4	3/4	2/4		
30	94,0	94,0	93,1	94,1	94,0	92,8	94,2	93,9	92,6	3	from 11/2014
37	94,4	94,0	93,5	94,6	94,0	93,3	94,7	93,9	93,1		
45	94,8	94,9	94,6	95,1	95,1	94,6	95,3	95,2	94,5		
55	95,1	95,0	94,9	95,4	95,3	94,9	95,5	95,3	94,8		
75	95,4	95,2	94,6	95,6	95,3	94,5	95,7	95,3	94,4		
90	95,6	95,5	94,9	95,8	95,6	94,8	95,9	95,6	94,7		

P_N	Manufacturer: WEG Equipamentos Eletricos S.A. Reg. No. 07.175.725/0010-50 Jaragua do Sul - SC (Brazil)	IEC SIZE	Construction Design	N. of Poles	f_N	Data for 400 V / 50 Hz Voltage				
kW	Model				Hz	cosφ	Is / I_N	T_N Nm	Ts/T_N	Tm/Tn
30	W22 200L B35 30KW E3	200	B35	2	50	0,86	7,30	96,60	2,60	2,90
37	W22 200L B35 37KW E3	200				0,86	7,30	119,20	2,60	2,90
45	W22 225S/M B35 45KW E3	225				0,88	8,00	144,70	2,70	3,20
55	W22 250S/M B35 55KW E3	250				0,89	7,90	177,10	2,80	2,90
75	W22 280S/M B35 75KW E3	280				0,90	7,60	240,3	2,30	2,90
90	W22 280S/M B35 90KW E3	280				0,90	7,40	288,4	2,20	2,80

P_N	Voltage U_N V					n_N min^{-1}	See note.	Operating conditions **		
	Δ			Y				Altitude Above Sea Level (m)	T. amb min/max °C	ATEX
	380 V	400 V	415 V	660 V	690 V					
kW	I_N (A)									
30	55,10	53,50	52,70	31,70	31,00	2960 ÷ 2970				
37	67,70	65,60	64,70	39,00	38,00	2960 ÷ 2970				
45	80,10	77,60	74,60	46,10	45,00	2965 ÷ 2970				
55	97,60	93,50	91,00	56,20	54,20	2960 ÷ 2965				
75	131,00	126,00	121,00	75,40	73,00	2975 ÷ 2980		≤ 1000	-15 / 40	No
90	159,00	151,00	145,00	91,50	87,50	2975 ÷ 2980				

** Operating conditions to be referred to motor only. About electric pump, refer to limits in user's manual.

Nscs-mott90-2p50-en_b_te

Note: Observe the regulations and codes locally in force regarding sorted waste disposal.

LOWARA
a xylem brand

NSCF, NSCC SERIES
THREE-PHASE MOTORS AT 50 Hz, 2 POLES (up to 18,5 kW)

P_N	Efficiency η_N %																		IE	Year of manufacture
	Δ 220 V Y 380 V			Δ 230 V Y 400 V			Δ 240 V Y 415 V			Δ 380 V Y 660 V			Δ 400 V Y 690 V			Δ 415 V				
kW	4/4	3/4	2/4	4/4	3/4	2/4	4/4	3/4	2/4	4/4	3/4	2/4	4/4	3/4	2/4	4/4	3/4	2/4		
1,1	84,0	84,7	83,4	84,4	84,5	82,5	84,3	84,0	81,4	84,0	84,0	81,4	84,0	84,0	81,4	84,0	84,0	81,4	3	from 11/2014
1,5	84,6	85,8	85,4	85,5	86,3	85,2	85,9	86,2	84,8	84,6	85,8	84,8	84,6	85,8	84,8	84,6	85,8	84,8		
2,2	86,5	87,4	86,8	86,4	86,9	85,7	86,6	86,7	85,0	86,4	86,7	85,0	86,4	86,7	85,0	86,4	86,7	85,0		
3	88,7	89,5	89,1	89,1	89,5	88,4	89,1	89,1	87,7	88,7	89,1	87,7	88,7	89,1	87,7	88,7	89,1	87,7		
4	88,6	89,0	87,6	88,6	89,0	87,6	88,6	89,0	87,6	88,7	89,6	89,1	88,6	89,2	88,3	88,9	89,0	87,6		
5,5	90,1	89,8	88,0	90,1	89,8	88,0	90,1	89,8	88,0	90,2	90,5	89,5	90,3	90,2	88,8	90,1	89,8	88,0		
7,5	90,6	90,5	89,0	90,6	90,5	89,0	90,6	90,5	89,0	90,6	91,0	90,2	90,8	90,8	89,6	90,7	90,5	89,0		
11	91,8	92,3	91,5	91,8	92,3	91,5	91,8	92,3	91,5	91,8	92,3	91,9	92,2	92,5	91,8	92,3	92,4	91,5		
15	92,5	92,4	91,2	92,5	92,4	91,2	92,5	92,4	91,2	92,7	93,3	92,9	93,1	93,3	92,7	92,5	92,4	91,2		
18,5	92,6	93,1	92,4	92,6	93,1	92,4	92,6	93,1	92,4	92,6	93,2	93,0	92,9	93,3	92,8	92,9	93,1	92,4		

P_N	Manufacturer: Xylem Service Italia Srl, Reg. No. 07520560967, Montecchio Maggiore Vicenza - Italia	IEC SIZE*	Construction Design	N. of Poles	f_N	Data for 400 V / 50 Hz Voltage				
kW	Model				Hz	cosφ	Is / I_N	T_N Nm	Ts/T_N	Tm/Tn
1,1	SM80B3/311 PE	80	B3	2	50	0,79	8,31	3,63	3,95	3,95
1,5	PLM90B3/315 E3	90				0,86	8,04	4,96	3,34	3,27
2,2	PLM90B3/322 E3	90				0,80	8,77	7,28	3,72	3,70
3	PLM100B3/330 E3	100				0,84	9,65	9,84	3,59	4,26
4	PLM112B3/340 E3	112				0,86	9,41	13,2	3,95	4,46
5,5	PLM132B3/355 E3	132				0,83	10,0	17,9	3,33	4,65
7,5	PLM132B3/375 E3	132				0,85	10,2	24,4	3,43	4,76
11	PLM160B3/3110 E3	160				0,88	8,59	35,6	2,36	4,14
15	PLM160B3/3150 E3	160				0,88	9,51	48,6	2,73	4,32
18,5	PLM160B3/3185 E3	160				0,88	9,81	59,9	2,81	4,53

P_N	Tensione U_N V											n_N	Observe the regulations and codes locally in force regarding sorted waste disposal.	Operating conditions **		
	Δ			Y			Δ			Y				Altitude Above Sea Level (m)	T. amb min/max °C	ATEX
kW	220 V	230 V	240 V	380 V	400 V	415 V	380 V	400 V	415 V	660 V	690 V					
	I_N (A)											min^{-1}				
1,1	4,19	4,14	4,16	2,42	2,39	2,4	2,41	2,38	2,38	1,39	1,37	2870 ÷ 2900				
1,5	5,35	5,11	5,04	3,09	2,95	2,91	3,09	2,96	2,91	1,78	1,71	2865 ÷ 2890				
2,2	7,97	7,90	7,98	4,6	4,56	4,61	4,57	4,54	4,57	2,64	2,62	2880 ÷ 2900				
3	10,2	10,0	10,1	5,91	5,79	5,82	5,94	5,83	5,87	3,43	3,37	2895 ÷ 2920				
4	13,3	13,1	13,1	7,69	7,56	7,55	7,70	7,56	7,57	4,45	4,36	2885 ÷ 2905				
5,5	18,9	18,8	18,9	10,9	10,9	10,9	10,7	10,6	10,7	6,2	6,14	2925 ÷ 2940				
7,5	24,8	24,4	24,3	14,3	14,4	14,0	14,4	14,1	14,2	8,32	8,16	2920 ÷ 2935				
11	35,0	33,9	33,0	20,2	19,6	19,1	20,4	19,6	19,2	11,8	11,3	2935 ÷ 2950				
15	47,6	46,1	45,2	27,5	26,6	26,1	27,5	26,6	26,1	15,9	15,3	2940 ÷ 2950				
18,5	58,3	56,7	55,6	33,7	32,7	32,1	34	33,0	32,7	19,6	19,0	2940 ÷ 2950				

⩽ 1000	-15 / 40	No

** Operating conditions to be referred to motor only. About electric pump, refer to limits in user's manual.

Nscf-IE3-mott18-2p50-en_a_te

LOWARA
a xylem brand

NSCF, NSCC SERIES
THREE-PHASE MOTORS AT 50 Hz, 2 POLES (from 22 to 200 kW)

P_N	Efficiency η_N %									IE	Year of manufacture
	Δ 380 V Y 660 V			Δ 400 V Y 690 V			Δ 415 V				
kW	4/4	3/4	2/4	4/4	3/4	2/4	4/4	3/4	2/4		
22	93,4	93,2	92,7	93,7	93,3	92,5	93,8	93,3	92,3	3	from 11/2014
30	94,0	94,0	93,1	94,1	94,0	92,8	94,2	93,9	92,6		
37	94,4	94,0	93,5	94,6	94,0	93,3	94,7	93,9	93,1		
45	94,8	94,9	94,6	95,1	95,1	94,6	95,3	95,2	94,5		
55	95,1	95,0	94,9	95,4	95,3	94,9	95,5	95,3	94,8		
75	95,4	95,2	94,6	95,6	95,3	94,5	95,7	95,3	94,4		
90	95,6	95,5	94,9	95,8	95,6	94,8	95,9	95,6	94,7		
110	96,0	95,7	94,8	96,1	95,7	94,7	96,1	95,7	94,6		
132	96,1	95,8	95,3	96,3	95,9	95,2	96,4	95,9	95,1		
160	96,4	96,1	95,7	96,6	96,2	95,6	96,7	96,2	95,5		
200	96,5	96,4	96,0	96,7	96,5	96,0	96,8	96,5	95,9		

P_N	Manufacturer: WEG Equipamentos Eletricos S.A. Reg. No. 07.175.725/0010-50 Jaragua do Sul - SC (Brazil)	IEC SIZE	Construction Design	N. of Poles	f_N	Data for 400 V / 50 Hz Voltage				
kW	Model				Hz	cosφ	Is / I_N	T_N Nm	Ts/T_N	Tm/Tn
22	W22 180M B3 22KW E3	180	B3	2	50	0,87	8,00	71,10	2,50	3,30
30	W22 200L B3 30KW E3	200				0,86	7,30	96,60	2,60	2,90
37	W22 200L B3 37KW E3	200				0,86	7,30	119,20	2,60	2,90
45	W22 225S/M B3 45KW E3	225				0,88	8,00	144,70	2,70	3,20
55	W22 250S/M B3 55KW E3	250				0,89	7,90	177,1	2,80	2,90
75	W22 280S/M B3 75KW E3	280				0,90	7,60	240,3	2,30	2,90
90	W22 280S/M-B3 90kW E3	280				0,90	7,40	288,4	2,20	2,80
110	W22 315S/M-B3 110kW E3	315				0,89	7,60	352,5	2,50	3,00
132	W22 315S/M-B3 132kW E3	315				0,90	7,50	423,0	2,10	2,80
160	W22 315S/M-B3 160kW E3	315				0,91	7,90	512,7	2,30	2,80
200	W22 315L-B3 200kW E3	315				0,90	8,20	640,9	2,60	2,80

P_N	Voltage U_N V					n_N	See note.	Operating conditions **		
	Δ			Y				Altitude Above Sea Level (m)	T. amb min/max °C	ATEX
	380 V	400 V	415 V	660 V	690 V					
kW	I_N (A)					min^{-1}				
22	40,70	39,00	37,90	23,40	22,60	2950 ÷ 2960				
30	55,10	53,50	52,70	31,70	31,00	2960 ÷ 2970				
37	67,70	65,60	64,70	39,00	38,00	2960 ÷ 2970				
45	80,10	77,60	74,60	46,10	45,00	2965 ÷ 2970				
55	97,60	93,50	91,00	56,20	54,20	2960 ÷ 2965				
75	131,0	126,0	121,0	75,40	73,00	2975 ÷ 2980		≤ 1000	-15 /+ 40	No
90	159,0	151,0	145,0	91,50	87,50	2975 ÷ 2980				
110	193,0	186,0	181,0	111,0	108,0	2975 ÷ 2980				
132	232,0	220,0	212,0	134,0	128,0	2975 ÷ 2980				
160	274,0	263,0	253,0	158,0	152,0	2975 ÷ 2980				
200	346,0	332,0	319,0	199,0	192,0	2975 ÷ 2980				

** Operating conditions to be referred to motor only. About electric pump, refer to limits in user's manual.

Nscf-mott200-2p50-en_b_te

Note: Observe the regulations and codes locally in force regarding sorted waste disposal.

LOWARA
a xylem brand

NSCE, NSC2 SERIES
THREE-PHASE MOTORS AT 50 Hz, 4 POLES

P_N	Efficiency η_N %																		IE	Year of manufacture
	Δ 220 V Y 380 V			Δ 230 V Y 400 V			Δ 240 V Y 415 V			Δ 380 V Y 660 V			Δ 400 V Y 690 V			Δ 415 V				
kW	4/4	3/4	2/4	4/4	3/4	2/4	4/4	3/4	2/4	4/4	3/4	2/4	4/4	3/4	2/4	4/4	3/4	2/4		
0,25	-	-	-	-	-	-	-	-	-	-	-	-	-	-	-	-	-	-	-	
0,37	-	-	-	-	-	-	-	-	-	-	-	-	-	-	-	-	-	-	-	06/11
0,55	-	-	-	-	-	-	-	-	-	-	-	-	-	-	-	-	-	-	-	
0,75	83,0	84,3	83,5	83,4	84,1	82,6	83,8	84,0	81,9	83,0	84,3	83,5	83,4	84,1	82,6	83,8	84,0	81,9		01/17
1,1	84,9	85,7	84,7	85,3	85,5	83,8	85,3	85,0	82,7	84,9	85,0	82,7	84,9	85,0	82,7	84,9	85,0	82,7		
1,5	86,6	87,0	85,7	86,7	86,9	84,5	86,4	85,9	83,3	86,4	85,9	83,3	86,4	85,9	83,3	86,4	85,9	83,3		
2,2	87,6	88,6	88,3	88,2	88,8	87,9	88,5	88,7	87,4	87,6	88,6	87,4	87,6	88,6	87,4	87,6	88,6	87,4	3	
3	88,5	89,2	88,5	88,6	88,9	87,6	88,6	88,6	86,8	88,5	88,6	86,8	88,5	88,6	86,8	88,5	88,6	86,8		11/14
4	88,6	89,1	87,9	88,6	89,1	87,9	88,6	89,1	87,9	88,6	89,2	88,9	88,6	89,2	88,4	88,8	89,1	87,9		

P_N	Manufacturer: Xylem Service Italia Srl, Reg. No. 07520560967, Montecchio Maggiore Vicenza - Italia	IEC SIZE*	Construction Design	N. of Poles	f_N	Data for 400 V / 50 Hz Voltage				
kW	Model				Hz	cosφ	Is / I_N	T_N Nm	Ts/T_N	Tm/Tn
0,25	SM471B5/302	71	B5	4	50	0,59	3,58	1,71	3,16	2,63
0,37	SM471B5/304	71				0,60	3,39	2,57	3,40	2,47
0,55	SM490RB14S2/305	90R	SPECIAL			0,67	3,95	3,77	2,45	2,38
0,75	LLM490RB14S2/307	90R				0,80	6,38	5,00	2,73	3,13
1,1	PLM4902FHE/311 E3	90				0,71	6,22	7,28	2,75	3,44
	PLM490B5S2/311 E3	90								
1,5	PLM490B5S2/315 E3	90				0,68	6,92	9,89	3,29	4,01
	PLM490B5S3/315 E3	90								
2,2	PLM4100B5S3/322 E3	100				0,78	7,47	14,5	2,38	3,69
3	PLM4100B5S3/330 E3	100				0,74	7,75	19,7	2,48	4,21
4	PLM4112B5S3/340 E3	112				0,79	8,32	26,3	3,19	4,02

P_N	Voltage U_N V											n_N	Соблюдайте действ. местные нормативно-правовые акты в отношении утилиз. отходов	Operating conditions **		
	Δ			Y			Δ			Y				Altitude Above Sea Level (m)	T. amb min/max °C	ATEX
kW	220 V	230 V	240 V	380 V	400 V	415 V	380 V	400 V	415 V	660 V	690 V					
	I_N (A)											min^{-1}				
0,25	1,68	1,71	1,77	0,97	0,99	1,02	-	-	-	-	-	1375 ÷ 1400				
0,37	2,46	2,53	2,62	1,42	1,46	1,51	-	-	-	-	-	1355 ÷ 1380				
0,55	2,98	3,03	3,1	1,72	1,75	1,79	-	-	-	-	-	1380 ÷ 1400				
0,75	2,90	2,85	2,85	1,70	1,65	1,65	1,70	1,65	1,65	0,98	0,95	1420 ÷ 1435				
1,1	4,61	4,59	4,62	2,66	2,65	2,67	2,64	2,63	2,65	1,53	1,52	1435 ÷ 1445				
1,5	6,34	6,41	6,41	3,66	3,70	3,70	3,65	3,68	3,69	2,11	2,13	1440 ÷ 1450		≤ 1000	-15 / 40	No
2,2	8,19	8,04	7,97	4,73	4,64	4,60	4,70	4,62	4,56	2,71	2,67	1445 ÷ 1455				
3	11,5	11,5	11,5	6,66	6,62	6,67	6,63	6,59	6,63	3,83	3,81	1450 ÷ 1460				
4	14,8	14,6	14,5	8,52	8,40	8,36	8,40	8,23	8,19	4,85	4,75	1445 ÷ 1455				

* R = Reduced size of motor casing as compared to shaft extension and flange.

Nsce-IE3-mott-4p50-en_c_te

** Operating conditions to be referred to motor only. About electric pump, refer to limits in user's manual.

LOWARA
a xylem brand

NSCS SERIES
THREE-PHASE MOTORS AT 50 Hz, 4 POLES

P_N	Efficiency η_N %																		IE	Year of manufacture
	Δ 220 V Y 380 V			Δ 230 V Y 400 V			Δ 240 V Y 415 V			Δ 380 V Y 660 V			Δ 400 V Y 690 V			Δ 415 V				
kW	4/4	3/4	2/4	4/4	3/4	2/4	4/4	3/4	2/4	4/4	3/4	2/4	4/4	3/4	2/4	4/4	3/4	2/4		
0,55	-	-	-	-	-	-	-	-	-	-	-	-	-	-	-	-	-	-	-	2011
0,75	83	84,3	83,5	83,4	84,1	82,6	83,8	84	81,9	83	84,3	83,5	83,4	84,1	82,6	83,8	84	81,9		01/17
1,1	84,9	85,7	84,7	85,3	85,5	83,8	85,3	85	82,7	84,9	85	82,7	84,9	85	82,7	84,9	85	82,7		
1,5	86,6	87	85,7	86,7	86,9	84,5	86,4	85,9	83,3	86,4	85,9	83,3	86,4	85,9	83,3	86,4	85,9	83,3		
2,2	87,6	88,6	88,3	88,2	88,8	87,9	88,5	88,7	87,4	87,6	88,6	87,4	87,6	88,6	87,4	87,6	88,6	87,4		
3	88,5	89,2	88,5	88,6	88,9	87,6	88,6	88,6	86,8	88,5	88,6	86,8	88,5	88,6	86,8	88,5	88,6	86,8	3	
4	88,6	89,1	87,9	88,6	89,1	87,9	88,6	89,1	87,9	88,6	89,2	88,9	88,6	89,2	88,4	88,8	89,1	87,9		11/14
5,5	90,4	90,9	89,7	90,4	90,9	89,7	90,4	90,9	89,7	90,4	91,0	90,5	90,9	91,1	90,2	90,9	90,9	89,7		
7,5	90,4	91,2	90,4	90,4	91,2	90,4	90,4	91,2	90,4	90,4	91,2	91,1	90,7	91,3	90,8	90,9	91,2	90,4		
11	91,5	92,2	91,4	91,5	92,2	91,4	91,5	92,2	91,4	91,5	92,4	92,4	91,9	92,5	92,0	91,9	92,2	91,4		
15	92,2	92,2	90,8	92,2	92,2	90,8	92,2	92,2	90,8	92,5	93,0	92,7	92,5	92,7	91,8	92,2	92,2	90,8		

P_N	Manufacturer: Xylem Service Italia Srl, Reg. No. 07520560967, Montecchio Maggiore Vicenza - Italia	IEC SIZE	Construction Design	N. of Poles	f_N	Data for 400 V / 50 Hz Voltage				
kW	Model				Hz	cosφ	Is / I_N	T_N Nm	T_s/T_N	T_m/T_n
0,55	SM480B5/305	80	B5	4	50	0,67	3,95	3,77	2,45	2,38
0,75	LLM480B5/307	80				0,80	6,38	5,00	2,73	3,31
1,1	PLM490B5/311 E3	90				0,71	6,22	7,28	2,75	3,44
1,5	PLM490B5/315 E3	90				0,68	6,92	9,89	3,29	4,01
2,2	PLM4100B5/322 E3	100				0,78	7,47	14,5	2,38	3,69
3	PLM4100B5/330 E3	100				0,74	7,75	19,7	2,48	4,21
4	PLM4112B5/340 E3	112				0,79	8,32	26,3	3,19	4,02
5,5	PLM4132B5/355 E3	132				0,76	7,64	35,9	2,85	3,65
7,5	PLM4132B5/375 E3	132				0,79	7,70	49,1	2,69	3,57
11	PLM4160B35/3110 E3	160	B35			0,81	7,19	71,5	2,45	3,26
15	PLM4160B35/3150 E3	160				0,77	8,23	97,2	2,97	3,99

P_N	Voltage U_N V											n_N	Observe the regulations and codes locally in force regarding sorted waste disposal.	Operating conditions **		
	Δ			Y			Δ			Y				Altitude Above Sea Level (m)	T. amb min/max °C	ATEX
P_N	220 V	230 V	240 V	380 V	400 V	415 V	380 V	400 V	415 V	660 V	690 V					
kW	I_N (A)											min^{-1}				
0,55	2,98	3,03	3,10	1,72	1,75	1,79	-	-	-	-	-	1380 ÷ 1400				
0,75	2,90	2,85	2,85	1,70	1,65	1,65	1,70	1,65	1,65	0,98	0,95	1420 ÷ 1435				
1,1	4,61	4,59	4,62	2,66	2,65	2,67	2,64	2,63	2,65	1,53	1,52	1435 ÷ 1445				
1,5	6,34	6,41	6,41	3,66	3,7	3,7	3,65	3,68	3,69	2,11	2,13	1440 ÷ 1450				
2,2	8,19	8,04	7,97	4,73	4,64	4,6	4,70	4,62	4,56	2,71	2,67	1445 ÷ 1455				
3	11,5	11,5	11,5	6,66	6,62	6,67	6,63	6,59	6,63	3,83	3,81	1450 ÷ 1460				
4	14,8	14,6	14,5	8,52	8,40	8,36	8,40	8,23	8,19	4,85	4,75	1445 ÷ 1455				
5,5	20,0	19,7	19,4	11,6	11,4	11,2	11,7	11,5	11,4	6,75	6,62	1455 ÷ 1465				
7,5	26,6	26,1	25,8	15,4	15,1	14,9	15,5	15,2	15,1	8,95	8,75	1450 ÷ 1460				
11	38,3	37,3	37,5	22,1	21,8	21,7	21,9	21,4	21,3	12,6	12,3	1465 ÷ 1470				
15	51,8	52	52,7	29,9	30,0	30,4	30,5	30,7	31,4	17,6	17,7	1465 ÷ 1475				
														≤ 1000	-15 / 40	No

** Operating conditions to be referred to motor only. About electric pump, refer to limits in user's manual.

LOWARA
a xylem brand

NSCS SERIES
THREE-PHASE MOTORS AT 50 Hz, 4 POLES (from 18,5 to 90 kW)

P_N	Efficiency η_N %									IE	Year of manufacture
	Δ 380 V Y 660 V			Δ 400 V Y 690 V			Δ 415 V				
kW	4/4	3/4	2/4	4/4	3/4	2/4	4/4	3/4	2/4		
18,5	93,1	92,9	92,5	93,3	92,9	92,2	93,4	92,8	91,8	3	from 11/2014
22	93,4	93,1	92,8	93,6	93,0	92,4	93,6	92,8	91,9		
30	94,1	94,1	93,5	94,2	94,0	93,0	94,2	93,9	92,5		
37	94,3	94,5	94,1	94,6	94,6	94,0	94,7	94,6	93,8		
45	94,7	94,7	94,3	94,8	94,8	94,2	94,8	94,8	94,0		
55	95,1	94,9	94,7	95,3	95,0	94,6	95,4	94,9	94,4		
75	95,4	95,2	94,8	95,6	95,2	94,7	95,7	95,2	94,6		
90	95,6	95,4	95,1	95,8	95,5	95,0	95,9	95,5	94,9		

P_N	Manufacturer WEG Equipamentos Eletricos S.A. Reg. No. 07.175.725/0010-50 Jaragua do Sul - SC (Brazil)	IEC SIZE	Construction Design	N. of Poles	f_N	Data for 400 V / 50 Hz Voltage				
kW	Model				Hz	cosφ	Is / I_N	T_N Nm	Ts/T_N	Tm/Tn
18,5	W22 180M4-B35 18.5kW E3	180	B35	4	50	0,82	7,30	120,20	2,70	3,00
22	W22 180L4-B35 22kW E3	180				0,83	7,30	142,90	2,80	3,30
30	W22 200L4-B35 30kW E3	200				0,82	7,30	193,60	2,50	3,00
37	W22 225S/M4-B35 37kW E3	225				0,86	7,80	238,70	2,70	3,00
45	W22 225S/M4-B35 45kW E3	225				0,85	7,90	290,40	2,80	3,20
55	W22 250S/M4-B35 55kW E3	250				0,86	7,90	354,90	2,80	3,30
75	W22 280S/M4-B35 75kW E3	280				0,87	7,60	482,30	2,30	2,80
90	W22 280S/M4-B35 90kW E3	280				0,86	7,40	578,80	2,30	2,80

P_N	Voltage U_N V					n_N	See note.	Operating conditions **		
	Δ			Y				Altitude Above Sea Level (m)	T. amb min/max °C	ATEX
	380 V	400 V	415 V	660 V	690 V					
kW	I_N (A)					min^{-1}				
18,5	35,90	34,90	34,40	20,70	20,20	1470				
22	42,10	40,90	40,40	24,20	23,70	1470				
30	57,70	56,10	55,40	33,20	32,50	1480				
37	68,50	65,60	63,90	39,40	38,00	1480				
45	83,90	79,40	78,60	48,30	46,00	1480				
55	100,0	96,90	94,40	57,60	56,20	1480		≤ 1000	-15 / +40	No
75	136,0	130,0	127,0	78,30	75,40	1485				
90	164,0	158,0	154,0	94,40	91,60	1485				

** Operating conditions to be referred to motor only. About electric pump, refer to limits in user's manual.

Nscs-mott90-4p50-en_a_te

Note: Observe the regulations and codes locally in force regarding sorted waste disposal.

LOWARA
a xylem brand

NSCF, NSCC SERIES
THREE-PHASE MOTORS AT 50 Hz, 4 POLES (from 0,25 to 15 kW)

P_N	Efficiency η_N %																		IE	Year of manufacture
	Δ 220 V Y 380 V			Δ 230 V Y 400 V			Δ 240 V Y 415 V			Δ 380 V Y 660 V			Δ 400 V Y 690 V			Δ 415 V				
kW	4/4	3/4	2/4	4/4	3/4	2/4	4/4	3/4	2/4	4/4	3/4	2/4	4/4	3/4	2/4	4/4	3/4	2/4		
0,25	-	-	-	-	-	-	-	-	-	-	-	-	-	-	-	-	-	-	-	
0,37	-	-	-	-	-	-	-	-	-	-	-	-	-	-	-	-	-	-	-	06/11
0,55	-	-	-	-	-	-	-	-	-	-	-	-	-	-	-	-	-	-	-	
0,75	83,0	84,3	83,5	83,4	84,1	82,6	83,8	84,0	81,9	83,0	84,3	83,5	83,4	84,1	82,6	83,8	84,0	81,9		01/17
1,1	84,9	85,7	84,7	85,3	85,5	83,8	85,3	85,0	82,7	84,9	85,0	82,7	84,9	85,0	82,7	84,9	85,0	82,7		
1,5	86,6	87,0	85,7	86,7	86,9	84,5	86,4	85,9	83,3	86,4	85,9	83,3	86,4	85,9	83,3	86,4	85,9	83,3		
2,2	87,6	88,6	88,3	88,2	88,8	87,9	88,5	88,7	87,4	87,6	88,6	87,4	87,6	88,6	87,4	87,6	88,6	87,4		
3	88,5	89,2	88,5	88,6	88,9	87,6	88,6	88,6	86,8	88,5	88,6	86,8	88,5	88,6	86,8	88,5	88,6	86,8		
4	88,6	89,1	87,9	88,6	89,1	87,9	88,6	89,1	87,9	88,6	89,2	88,9	88,6	89,2	88,4	88,8	89,1	87,9	3	11/14
5,5	90,4	90,9	89,7	90,4	90,9	89,7	90,4	90,9	89,7	90,4	91,0	90,5	90,9	91,1	90,2	90,9	90,9	89,7		
7,5	90,4	91,2	90,4	90,4	91,2	90,4	90,4	91,2	90,4	90,4	91,2	91,1	90,7	91,3	90,8	90,9	91,2	90,4		
11	91,5	92,2	91,4	91,5	92,2	91,4	91,5	92,2	91,4	91,5	92,4	92,4	91,9	92,5	92,0	91,9	92,2	91,4		
15	92,2	92,2	90,8	92,2	92,2	90,8	92,2	92,2	90,8	92,5	93,0	92,7	92,5	92,7	91,8	92,2	92,2	90,8		

P_N	Manufacturer: Xylem Service Italia Srl, Reg. No. 07520560967, Montecchio Maggiore Vicenza - Italia	IEC SIZE	Construction Design	N. of Poles	f_N	Data for 400 V / 50 Hz Voltage				
kW	Model				Hz	cosφ	Is / I_N	T_N Nm	Ts/T_N	Tm/Tn
0,25	SM471B3/302	71				0,59	3,58	1,71	3,16	2,63
0,37	SM471B3/304	71				0,60	3,39	2,57	3,40	2,47
0,55	SM480B3/305	80				0,67	3,95	3,77	2,45	2,38
0,75	LLM480B3/307	80				0,80	6,38	5,00	2,73	3,31
1,1	PLM490B3/311 E3	90				0,71	6,22	7,28	2,75	3,44
1,5	PLM490B3/315 E3	90				0,68	6,92	9,89	3,29	4,01
2,2	PLM4100B3/322 E3	100	B3	4	50	0,78	7,47	14,5	2,38	3,69
3	PLM4100B3/330 E3	100				0,74	7,75	19,7	2,48	4,21
4	PLM4112B3/340 E3	112				0,79	8,32	26,3	3,19	4,02
5,5	PLM4132B3/355 E3	132				0,76	7,64	35,9	2,85	3,65
7,5	PLM4132B3/375 E3	132				0,79	7,70	49,1	2,69	3,57
11	PLM4160B3/3110 E3	160				0,81	7,19	71,5	2,45	3,26
15	PLM4160B3/3150 E3	160				0,77	8,23	97,2	2,97	3,99

P_N	Voltage U_N V											n_N	Observe the regulations and codes locally in force regarding sorted waste disposal.	Operating conditions **		
	Δ			Y			Δ			Y				Altitude Above Sea Level (m)	T. amb min/max °C	ATEX
kW	220 V	230 V	240 V	380 V	400 V	415 V	380 V	400 V	415 V	660 V	690 V	min^{-1}				
	I_N (A)															
0,25	1,68	1,71	1,77	0,97	0,99	1,02	-	-	-	-	-	1375 ÷ 1400				
0,37	2,46	2,53	2,62	1,42	1,46	1,51	-	-	-	-	-	1355 ÷ 1380				
0,55	2,98	3,03	3,1	1,72	1,75	1,79	-	-	-	-	-	1380 ÷ 1400				
0,75	2,90	2,85	2,85	1,70	1,65	1,65	1,70	1,65	1,65	0,98	0,95	1420 ÷ 1435				
1,1	4,61	4,59	4,62	2,66	2,65	2,67	2,64	2,63	2,65	1,53	1,52	1435 ÷ 1445				
1,5	6,34	6,41	6,41	3,66	3,70	3,70	3,65	3,68	3,69	2,11	2,13	1440 ÷ 1450				
2,2	8,19	8,04	7,97	4,73	4,64	4,60	4,70	4,62	4,56	2,71	2,67	1445 ÷ 1455				
3	11,5	11,5	11,5	6,66	6,62	6,67	6,63	6,59	6,63	3,83	3,81	1450 ÷ 1460				
4	14,8	14,6	14,5	8,52	8,40	8,36	8,40	8,23	8,19	4,85	4,75	1445 ÷ 1455				
5,5	20,0	19,7	19,4	11,6	11,4	11,2	11,7	11,5	11,4	6,75	6,62	1455 ÷ 1465				
7,5	26,6	26,1	25,8	15,4	15,1	14,9	15,5	15,2	15,1	8,95	8,75	1450 ÷ 1460				
11	38,3	37,3	37,5	22,1	21,8	21,7	21,9	21,4	21,3	12,6	12,3	1465 ÷ 1470				
15	51,8	52	52,7	29,9	30,0	30,4	30,5	30,7	31,4	17,6	17,7	1465 ÷ 1475				
														≤ 1000	-15 / 40	No

** Operating conditions to be referred to motor only. About electric pump, refer to limits in user's manual.

Nscf-IE3-mott15-4p50-en_b_te

LOWARA
a xylem brand

NSCF, NSCC SERIES
THREE-PHASE MOTORS AT 50 Hz, 4 POLES (from 18,5 to 315 kW)

P_N	Efficiency η_N %									IE	Year of manufacture
	Δ 380 V Y 660 V			Δ 400 V Y 690 V			Δ 415 V				
kW	4/4	3/4	2/4	4/4	3/4	2/4	4/4	3/4	2/4		
18,5	93,1	92,9	92,5	93,3	92,9	92,2	93,4	92,8	91,8	3	from 11/2014
22	93,4	93,1	92,8	93,6	93,0	92,4	93,6	92,8	91,9		
30	94,1	94,1	93,5	94,2	94,0	93,0	94,2	93,9	92,5		
37	94,3	94,5	94,1	94,6	94,6	94,0	94,7	94,6	93,8		
45	94,7	94,7	94,3	94,8	94,8	94,2	94,8	94,8	94,0		
55	95,1	94,9	94,7	95,3	95,0	94,6	95,4	94,9	94,4		
75	95,4	95,2	94,8	95,6	95,2	94,7	95,7	95,2	94,6		
90	95,6	95,4	95,1	95,8	95,5	95,0	95,9	95,5	94,9		
110	96,2	95,9	95,5	96,3	95,9	95,4	96,3	95,8	95,2		
132	96,3	96,0	95,6	96,4	96,0	95,5	96,4	95,9	95,3		
160	96,3	96,2	95,8	96,5	96,2	95,7	96,6	96,2	95,5		
200	96,5	96,5	96,2	96,7	96,5	96,1	96,7	96,5	95,9		
250	96,8	96,6	96,4	96,9	96,6	96,2	96,9	96,5	96,0		
315	96,8	96,7	96,5	96,9	96,7	96,4	97,0	96,7	96,3		
355	96,8	96,8	96,6	96,9	96,8	96,5	97,0	96,8	96,4		

P_N	Manufacturer: WEG Equipamentos Eletricos S.A. Reg. No. 07.175.725/0010-50 Jaragua do Sul - SC (Brazil)	IEC SIZE	Construction Design	N. of Poles	f_N	Data for 400 V / 50 Hz Voltage				
kW	Model				Hz	cosφ	Is / I_N	T_N Nm	Ts/T_N	Tm/Tn
18,5	W22 180M4-B3 18.5kW E3	180	B3	4	50	0,82	7,30	120,20	2,70	3,00
22	W22 180L4-B3 22kW E3	180				0,83	7,30	142,90	2,80	3,30
30	W22 200L4-B3 30kW E3	200				0,82	7,30	193,60	2,50	3,00
37	W22 225S/M4-B3 37kW E3	225				0,86	7,80	238,70	2,70	3,00
45	W22 225S/M4-B3 45kW E3	225				0,85	7,90	290,40	2,80	3,20
55	W22 250S/M4-B3 55kW E3	250				0,86	7,90	354,90	2,80	3,30
75	W22 280S/M4-B3 75kW E3	280				0,87	7,60	482,30	2,30	2,80
90	W22 280S/M4-B3 90kW E3	280				0,86	7,40	578,80	2,30	2,80
110	W22 315S/M4-B3 110kW E3	315				0,86	7,50	705,00	2,60	2,70
132	W22 315S/M4-B3 132kW E3	315				0,86	7,60	846,00	2,90	3,00
160	W22 315S/M4-B3 160kW E3	315				0,87	7,60	1025,0	2,60	2,60
200	W22 315L4-B3 200kW E3	315				0,87	7,60	1282,0	2,50	2,50
250	W22 315L4-B3 250kW E3	315				0,86	8,00	1602,0	2,70	2,60
315	W22 355M/L4-B3 315kW E3	355				0,86	7,30	2019,0	2,30	2,40
355	W22 355M/L4-B3 355kW E3	355				0,86	7,20	2275,0	2,40	2,50

P_N	Voltage U_N V					n_N	See note	Operating conditions **		
	Δ			Y				Altitude Above Sea Level (m)	T. amb min/max °C	ATEX
	380 V	400 V	415 V	660 V	690 V					
kW	I_N (A)					min^{-1}				
18,5	35,90	34,90	34,40	20,70	20,20	1470				
22	42,10	40,90	40,40	24,20	23,70	1470				
30	57,70	56,10	55,40	33,20	32,50	1480				
37	68,50	65,60	63,90	39,40	38,00	1480				
45	83,90	79,40	78,60	48,30	46,00	1480				
55	100,0	96,90	94,40	57,60	56,20	1480				
75	136,0	130,0	127,0	78,30	75,40	1485				
90	164,0	158,0	154,0	94,40	91,60	1485		≤ 1000	-20 / +40	No
110	200,0	192,0	187,0	115,0	111,0	1490				
132	239,0	230,0	224,0	138,0	133,0	1490				
160	287,0	275,0	268,0	165,0	159,0	1490				
200	358,0	343,0	335,0	206,0	199,0	1490				
250	451,0	433,0	422,0	260,0	251,0	1490				
315	575,0	552,0	538,0	331,0	320,0	1490				
355	640,0	615,0	599,0	368,0	357,0	1490				

** Operating conditions to be referred to motor only. About electric pump, refer to limits in user's manual.

Nscf-mott355-4p50-en_c_te

Note: Observe the regulations and codes locally in force regarding sorted waste disposal.

LOWARA
a xylem brand

e-NSC SERIES
AVAILABLE VOLTAGES FOR SM AND PLM MOTORS

	SINGLE-PHASE							
	50 Hz			60 Hz				
P_N kW	1 x 220-240	1 x 100	1 x 110-120	1 x 220-230	1 x 100	1x 110-115	1 x 120-127	1 x 200-210
0,37	s	o	o	s	-	o	-	-
0,55	s	o	o	s	o	o	o	o
0,75	s	o	o	s	o	o	o	o
1,1	s	-	o	s	-	o	-	o
1,5	s	-	-	s	-	o	-	o
2,2	s	-	-	s	-	-	-	-

	THREE-PHASE																
	50/60 Hz		50 Hz							60 Hz							
P_N kW	3 x 230/400 50 Hz 3 x 265/460 60 Hz	3 x 400/690 50 Hz 3 x 460/- 60 Hz	3 x 220-230-240/380-400-415	3 x 380-400-415/660-690	3 x 200-208/346-360	3 x 255-265/440-460	3 x 290-300/500-525	3 x 440-460/-	3 x 500-525/-	3 x 220-230/380-400	3 x 255-265-277/440-460-480	3 x 380-400/660-690	3 x 440-460-480/-	3 x 110-115/190-200	3 x 200-208/346-360	3 x 330-346/575-600	3 x 575/-
0,37	s	o	o	o	o	o	o	o	o	s	o	o	o	o	o	o	o
0,55	s	o	o	o	o	o	o	o	o	s	o	o	o	o	o	o	o
0,75	s	o	o	o	o	o	o	o	o	s	o	o	o	o	o	o	o
1,1	s	o	o	o	o	o	o	o	o	s	o	o	o	o	o	o	o
1,5	s	o	o	o	o	o	o	o	o	s	o	o	o	o	o	o	o
2,2	s	o	o	o	o	o	o	o	o	s	o	o	o	o	o	o	o
3	s	o	o	o	o	o	o	o	o	s	o	o	o	o	o	o	o
4	o	s	o	o	o	o	o	o	o	s	o	o	o	o	o	o	o
5,5	o	s	o	o	o	o	o	o	o	s	o	o	o	o	o	o	o
7,5	o	s	o	o	o	o	o	o	o	s	o	o	o	o	o	o	o
11	o	s	o	o	o	o	o	o	o	s	o	o	o	o	o	o	o
15	o	s	o	o	o	o	o	o	o	s	o	o	o	o	o	o	o
18,5	o	s	o	o	o	o	o	o	o	s	o	o	o	o	o	o	o
22	o	s	o	o	o	o	o	o	o	s	o	o	o	o	o	o	o

s = Standard voltage o = Voltage upon request - = Not available

nsc-volt-lowa-en_a_te

For higher power motors special voltages available on request.

LOWARA
a xylem brand

e-NSC SERIES
MOTOR NOISE

The tables below show the mean sound pressure levels (Lp) measured at 1 meter distance in a free field according to EN ISO 11203.
The noise values are measured on 50 Hz motors and have a tolerance of 3 dB (A) according to EN ISO 4871.

MOTORS 2 POLES 50 Hz

POWER kW	MOTOR TYPE IEC SIZE	NOISE LpA dB
1,1	80	<70
	90R	<70
1,5	90R	<70
	90	<70
2,2	90	<70
3	90	<70
	100R	<70
	100	<70
4	112R	<70
	112	<70
5,5	112	<70
	132R	<70
	132	71
7,5	132	71
9,2	132	73
11	132	73
	160	71
15	160	71
18,5	160	73
22	160	70
	180R	70
	180	67
30	200	69
37	200	69
45	225	74
55	250	74
75	280	77
90	280	77
110	315	77
132	315	77
160	315	77
200	315	80

*R=Reduced size of motor as compared to shaft extension and flange.

MOTORS 4 POLES 50 Hz

POWER kW	MOTOR TYPE IEC SIZE	NOISE LpA dB
0,25	71	<70
0,37	71	<70
0,55	80	<70
	90R	<70
0,75	80	<70
	90R	<70
1,1	90	<70
1,5	90	<70
2,2	100	<70
3	100	<70
4	112	<70
5,5	132	<70
7,5	132	<70
11	160	<70
15	160	<70
18,5	180	<70
22	180	<70
30	200	<70
37	225	<70
45	225	<70
55	250	<70
75	280	<70
90	280	<70
110	315	71
132	315	71
160	315	71
200	315	73
250	315	73
315	355	74
355	355	74

ErP 2009/125/EC

LOWARA
a xylem brand

e-NSC SERIES PUMPS

With the "Energy using Products" (EuP 2005/32/EC) and "Energy related Products" (ErP 2009/125/EC) directives, the European Commission has established requirements for promoting the use of products with low power consumption.

The **Commission Regulation (EU) No 547/2012** has implemented two directives with regard to ecodesign requirements for **some types of clean water pumps** placed on the market and put into service inside EU zone as self-alone units or integrated in other products.

For end-suction close-coupled pumps (ESCC for the Regulation) and end-suction own-bearing pumps (ESOB for the Regulation) the efficiency assessment refers to:

- just the pump and not the pump and motor assembly (electric or combustion);
- pumps with just one impeller;
- pumps with a nominal pressure PN not higher than 16 bar (1600 kPa);
- pumps with a minimum nominal flow not less than 6 m^3/h;
- pumps with a maximum nominal power at the shaft not higher than 150 kW;
- pumps designed to operate at a speed of 2900 min^{-1} (for electric pumps this means 50 Hz 2-pole electric motors) and with a head not greater than 140 metres;
- pumps designed to operate at a speed of 1450 min^{-1} (for electric pumps this means 50 Hz 4-pole electric motors) and with a head not greater than 90 metres;
- use with clean water at a temperature ranging from -10°C to 120°C (the test is performed with cold water at a temperature not higher than 40°C).

According to the definitions established in the Regulation NSCE and NSCS versions correspond to the "end-suction close-coupled pump" while NSC, NSCF and NSCC versions correspond to the "end-suction own bearing pump". This regulation states that water pumps shall have a minimum index MEI coming from a dedicated formula which considers hydraulic efficiency values at 'best efficiency point' (BEP), 75 % of the flow at BEP (Part load – PL) and 110 % of the flow at BEP (Over load – OL).

The Regulation also establishes the following deadlines.

from	minimum efficiency index (MEI)
1st January 2013	MEI ≥ 0,1
1st January 2015	MEI ≥ 0,4

NSC2 models are out of the scope of the Regulation.

Regulation (EU) n. 547/2012 – Annex II – point 2 (Product information requirements)

1) Minimum efficiency index: see MEI values in specific tables on following page.
2) "The benchmark for most efficient water pumps is MEI ≥ 0,70".
3) Year of manufacture: 2014.
4) Manufacturer: Xylem Service Italia Srl - Reg. No 07520560967 - Montecchio Maggiore, Vicenza, Italy.
5) Product type: see the PUMP TYPE column in the tables in the *Hydraulic performance* section.
6) Hydraulic pump efficiency with trimmed impeller: see ηp and Ø columns in the tables in the *Hydraulic performance* section.
7) Pump performance curves, including the performance curve: see the *Operating Characteristics* graphs in the following pages.
8) "The efficiency of a pump with a trimmed impeller is usually lower than that of a pump with the full impeller diameter. The trimming of the impeller will adapt the pump to a fixed duty point, leading to reduced energy consumption. The minimum efficiency index (MEI) is based on the full impeller diameter".
9) "The operation of this water pump with variable duty points may be more efficient and economic when controlled, for example, by the use of a variable speed drive that matches the pump duty to the system".
10) Information relevant for disassembly, recycling or disposal at end-of-life: observe the current laws and by-laws governing sorted waste disposal. Consult the product operating manual.
11) "Designed for use below – 10 °C only": note not applicable to these products.
12) "Designed for use above 120 °C only": note not applicable to these products.
13) Specific instructions for pumps as per points 11 and 12: not applicable to these products.
14) "Information on benchmark efficiency is available at": www.europump.org (Ecodesign section).
15) The benchmark efficiency graphs with MEI = 0.7 and MEI = 0.4 are available at www.europump.org, Ecodesign,Efficiency charts (refer to "ESCC 1450 rpm", "ESCC 2900 rpm", "ESOB 1450 rpm", "ESOB 2900 rpm").

e-NSC SERIES
MINIMUM EFFICIENCY INDEX (MEI)

2-POLE		
PUMP SIZE (1)	NSC, NSCE NSCF, NSCC	NSCS
32-125	≥0,40	≥0,40
32-160	≥0,40	≥0,40
32-200	≥0,40	≥0,40
NSC2 32-250	---	---
32-250	≥0,40	≥0,40
40-125	≥0,40	≥0,40
40-160	≥0,40	≥0,40
40-200	≥0,40	≥0,40
40-250	≥0,40	≥0,40
50-125	≥0,40	≥0,40
50-160	≥0,40	≥0,40
50-200	≥0,40	≥0,40
50-250	≥0,40	≥0,40
50-315	≥0,40	≥0,40
65-125	≥0,40	≥0,40
65-160	≥0,40	≥0,40
65-200	≥0,40	≥0,40
65-250	≥0,40	≥0,40
65-315	≥0,40	≥0,40
80-160	≥0,40	≥0,40
80-200	≥0,40	≥0,40
80-250	≥0,40	≥0,40
80-316	≥0,40	≥0,40
100-160	≥0,70	≥0,70
100-200	0,69	≥0,70
100-250	≥0,70	≥0,70
100-316	0,43	---
125-200	≥0,70	≥0,70
125-315	---	---

4-POLE		
PUMP SIZE (1)	NSC, NSCE NSCF, NSCC	NSCS
32-125	≥0,40	≥0,40
32-160	≥0,40	≥0,40
32-200	≥0,40	≥0,40
NSC2 32-250	---	---
32-250	≥0,40	≥0,40
40-125	≥0,40	≥0,40
40-160	≥0,40	≥0,40
40-200	≥0,40	≥0,40
40-250	≥0,40	≥0,40
50-125	≥0,40	≥0,40
50-160	≥0,40	≥0,40
50-200	≥0,40	≥0,40
50-250	≥0,40	≥0,40
50-315	≥0,40	≥0,40
65-125	≥0,40	≥0,40
65-160	≥0,40	≥0,40
65-200	≥0,40	≥0,40
65-250	≥0,40	≥0,40
65-315	≥0,40	≥0,40
80-160	≥0,40	≥0,40
80-200	≥0,40	≥0,40
80-250	≥0,40	≥0,40
80-316	≥0,40	≥0,40
80-400	≥0,40	≥0,40
100-160	≥0,70	≥0,70
100-200	0,64	0,69
100-250	≥0,70	≥0,70
100-315	0,64	0,69
100-400	0,50	0,55
125-200	0,66	≥0,70
125-250	≥0,70	≥0,70
125-315	≥0,70	≥0,70
125-400	0,66	≥0,70
150-200	0,69	≥0,70
150-250	0,64	0,68
150-315	0,53	0,58
150-400	≥0,70	≥0,70
150-500	---	---
200-250	0,65	0,70
200-315	0,51	0,56
200-400	0,50	---
200-500	---	---
250-315	0,62	0,66
250-400	---	---
250-500	---	---
300-350	≥0,70	---
300-400	---	---
300-450	---	---

(1) MEI referred to full impeller diameter

Nsc-MEI-en_c_sc

LOWARA
a xylem brand

e-NSC SERIES
HYDRAULIC PERFORMANCE RANGE AT 50 Hz, 2 POLES

NSC	~ 2900 [rpm]	ISO 9906:2012 - Grade 3B

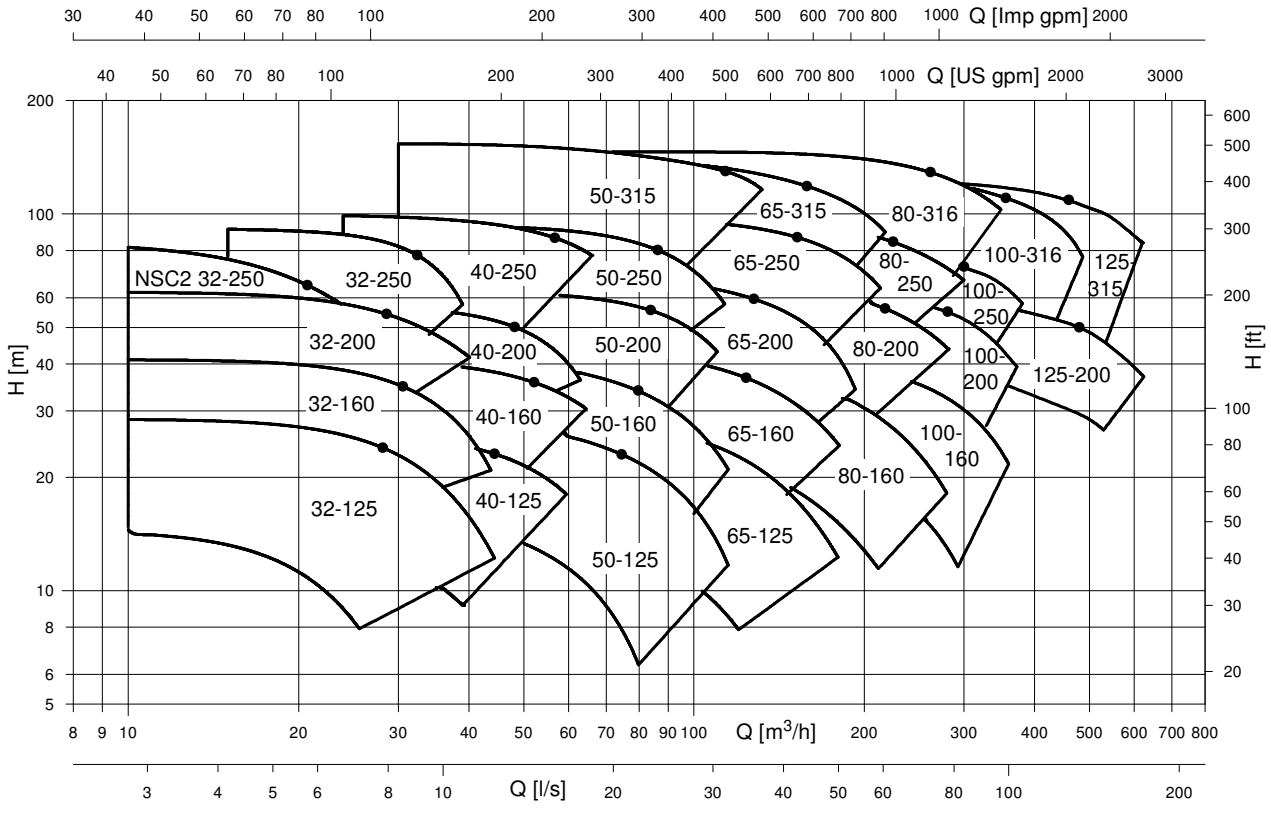

LOWARA
a xylem brand

e-NSC 32, 40, 50 SERIES
HYDRAULIC PERFORMANCE TABLE AT 50 Hz, 2 POLES

PUMP TYPE	P_N	Ø Impeller (mm)			ηp %	Q = DELIVERY												
		STD	B	Ø		l/s 0	1,8	2,6	3,5	4,4	5,3	6,1	7,0	7,9	8,8	9,6	10,5	11,4
						m^3/h 0	6	9	13	16	19	22	25	28	32	35	38	41
	kW	(1)		(2)	(3)	H = TOTAL HEAD METRES COLUMN OF WATER												
32-125/11*	1,1	113	-	○	60,7	14,2	14,4	14,2	13,7	12,9	11,8	10,2	8,2					
32-125/15*	1,5	123	-	○	65,9	17,9		18,0	17,5	16,7	15,7	14,3	12,6	10,5				
32-125/22*	2,2	133	-	○	70,2	22,7		23,0	22,8	22,3	21,7	20,7	19,5	17,9	16,0	13,6		
32-125/30	3	145	-	●	70,4	27,7			28,4	28,1	27,5	26,6	25,5	24,0	22,3	20,2	17,8	15,1
32-160/22*	2,2	137	-	○	62,5	24,2		23,9	23,6	23,0	22,1	20,7	18,7					
32-160/30	3	150	-	○	65,7	29,3		29,5	29,2	28,7	27,9	26,6	25,0	22,9	20,2			
32-160/40	4	160,5	-	○	66,1	34,4		35,0	34,9	34,6	34,0	32,9	31,4	29,5	27,0	24,0		
32-160/55	5,5	171	-	●	67,5	40,4			40,9	40,7	40,2	39,3	38,1	36,3	34,1	31,4	28,1	
32-200/30	3	158	-	○	57,2	33,1		32,6	31,9	30,7	28,8	26,1						
32-200/40	4	171	-	○	61,1	40,2		39,8	39,4	38,6	37,3	35,4	32,6					
32-200/55	5,5	186	-	○	61,7	48,9		48,4	48,0	47,2	46,1	44,4	42,0	38,8				
32-200/75	7,5	205	-	●	62,0	62,4			61,9	61,1	59,6	57,6	55,2	52,8	50,0			
NSC2 32-250/55	5,5	174	-	○	49,9	70,3		64,7	61,3	56,5	50,6	44,0						
NSC2 32-250/75	7,5	190,5	-	●	50,4	88,3		82,0	79,1	74,6	68,6	61,6	54,2					
32-250/75	7,5	214	-	○	45,5	58,7			57,5	56,0	53,7	50,6	46,5	41,0				
32-250/92	9,2	226,5	-	○	47,5	66,8			65,8	64,6	62,7	60,3	57,2	52,8				
32-250/110A	11	226,5	-	○	47,5	66,8			65,8	64,6	62,7	60,3	57,2	52,8				
32-250/110	11	239	-	○	48,3	76,0				73,7	71,7	69,2	66,1	62,2	57,0			
32-250/150	15	259	-	●	50,5	92,5				91,0	90,4	89,3	87,4	84,3	79,5	72,3	62,2	

PUMP TYPE	P_N	Ø Impeller (mm)			ηp %	Q = DELIVERY												
		STD	B	Ø		l/s 0	2,7	4,1	5,5	6,9	8,4	9,8	11,2	12,6	14,1	15,5	16,9	18,3
						m^3/h 0	10	15	20	25	30	35	40	45	51	56	61	66
	kW	(1)		(2)	(3)	H = TOTAL HEAD METRES COLUMN OF WATER												
40-125/15*	1,5	105	-	○	69,3	14,5	14,7	14,5	13,9	13,1	11,9	10,5						
40-125/22*	2,2	118	-	○	73,1	19,4		18,8	18,2	17,4	16,4	15,0	13,3	11,1				
40-125/30	3	130	-	○	78,1	23,2		22,9	22,6	22,0	21,2	20,0	18,6	16,9	15,0			
40-125/40	4	135	-	●	81,1	26,7			26,5	26,2	25,7	25,0	24,0	22,8	21,3	19,5		
40-160/30	3	127	-	○	69,2	21,8		22,8	22,5	21,8	20,7	19,3	17,4					
40-160/40	4	139	-	○	71,6	26,4		27,8	27,7	27,2	26,4	25,2	23,6	21,6				
40-160/55	5,5	154	-	○	75,0	33,3		34,7	34,7	34,4	33,8	32,8	31,5	29,9	28,0	25,7		
40-160/75	7,5	165	-	●	75,6	40,8			41,3	41,2	40,9	40,2	39,2	37,9	36,2	34,3	32,0	
40-200/55	5,5	165	-	○	62,4	36,2		36,6	36,4	35,7	34,4	32,4	29,5					
40-200/75	7,5	179	-	○	64,0	44,2		45,0	44,8	44,2	43,3	41,7	39,4	36,1	31,6			
40-200/92	9,2	189	-	○	67,3	49,8			50,9	50,5	50,0	49,0	47,6	45,2	41,6	36,3		
40-200/110A	11	189	-	○	67,3	49,8			50,9	50,5	50,0	49,0	47,6	45,2	41,6	36,3		
40-200/110	11	199	-	●	67,6	56,1			57,1	56,8	56,3	55,4	53,9	51,8	48,7	44,5	38,8	
40-250/92	9,2	199	-	○	58,8	54,9			54,8	54,1	52,7	50,5	47,2					
40-250/110A	11	199	-	○	58,8	54,9			54,8	54,1	52,7	50,5	47,2					
40-250/110	11	210	-	○	59,3	60,5			59,5	58,9	57,7	55,9	53,1	49,0				
40-250/150	15	228	-	○	61,0	73,9				72,7	71,9	70,6	68,7	65,9	61,9			
40-250/185	18,5	243	-	○	65,2	86,5				85,2	84,5	83,6	82,2	80,1	77,1	72,9		
40-250/220	22	257,5	-	●	66,8	99,8				98,1	97,4	96,6	95,5	93,8	91,3	87,9	83,1	76,6

PUMP TYPE	P_N	Ø Impeller (mm)			ηp %	Q = DELIVERY												
		STD	B	Ø		l/s 0	4,6	7,5	10,4	13,4	16,3	19,2	22,1	25,0	27,9	30,8	33,8	36,7
						m^3/h 0	17	27	38	48	59	69	80	90	101	111	122	132
	kW	(1)		(2)	(3)	H = TOTAL HEAD METRES COLUMN OF WATER												
50-125/30	3	118	-	○	66,1	17,1		16,2	15,2	13,7	11,7	9,3	6,5					
50-125/40	4	130	-	○	70,6	21,3		20,4	19,5	18,1	16,3	14,0	11,2	8,2				
50-125/55	5,5	144	-	○	73,2	26,9		25,6	24,9	23,8	22,2	20,1	17,6	14,7	11,5			
50-125/75	7,5	148	-	●	75,2	30,9		29,2	28,4	27,3	25,9	24,1	21,9	19,3	16,2	12,8		
50-160/55	5,5	144	-	○	71,9	27,1		26,2	25,3	23,8	21,7	18,9	15,7					
50-160/75	7,5	159	-	○	72,2	33,8		32,7	31,8	30,2	28,0	25,2	21,9	18,1				
50-160/92	9,2	170	-	○	72,6	38,8		38,0	37,3	36,0	34,1	31,6	28,5	24,9	20,7			
50-160/110A	11	170	-	○	72,6	38,8		38,0	37,3	36,0	34,1	31,6	28,5	24,9	20,7			
50-160/110	11	176	-	●	74,9	43,5		42,3	41,5	40,3	38,7	36,6	34,0	30,8	27,1	22,7		
50-200/92	9,2	168	-	○	70,7	36,5		37,5	37,5	36,8	35,1	32,4	28,5					
50-200/110A	11	168	-	○	70,7	36,5		37,5	37,5	36,8	35,1	32,4	28,5					
50-200/110	11	179	-	○	72,2	42,5		43,5	43,5	42,6	40,6	37,3	32,9					
50-200/150	15	197	-	○	74,4	53,5		54,3	54,3	53,6	51,9	49,0	44,9	39,8				
50-200/185	18,5	209	-	●	77,4	62,7		63,0	63,0	62,6	61,4	59,5	56,6	52,7	48,0			
50-250/150	15	208	-	○	65,4	57,9		57,7	57,2	55,6	52,8	48,3	42,1					
50-250/185	18,5	220	-	○	69,8	67,1		66,9	66,4	65,0	62,5	58,5	52,9	45,4				
50-250/220	22	232	-	○	70,3	75,1		74,9	74,4	73,2	71,0	67,6	62,5	55,7	46,7			
50-250/300	30	256	-	●	71,5	93,2		93,5	93,3	92,5	90,8	87,9	83,6	77,7	70,1	60,6		
50-315/370	37	264	-	○	61,2	101,7	100,8	100,2	98,3	95,3	92,0	88,9	86,1	82,2				
50-315/450	45	278	-	○	62,1	112,7		112,4	111,2	108,8	105,6	102,2	98,8	95,3	90,2			
50-315/550	55	298	-	○	63,2	131,0		128,6	127,8	126,6	124,6	121,7	117,8	113,6	109,3	104,3		
50-315/750	75	322	-	●	64,2	154,0		151,9	151,6	151,0	149,7	147,3	143,8	139,4	134,9	130,3	125,0	117,1

Hydraulic performances in compliance with ISO 9906:2012 - Grade 3B (ex ISO 9906:1999 - Annex A)

Nsc-32-40-50_2p50-en_f_th

(1) **STD** = Cast iron/Stainless steel - **B** = Bronze (2) ● = Full impeller diameter - **○** = Trimmed impeller diameter (3) Hydraulic efficiency of pump.

*Available also in single-phase version.

LOWARA
a xylem brand

e-NSC 65, 80 SERIES
HYDRAULIC PERFORMANCE TABLE AT 50 Hz, 2 POLES

PUMP TYPE	P_N	Ø Impeller (mm)				Q = DELIVERY												
		STD	B	Ø	ηp %	l/s 0	6	11,8	17,1	22,4	27,8	33,1	38,4	43,7	49,0	54,4	59,7	65
						m^3/h 0	23	42	62	81	100	119	138	157	177	196	215	234
	kW	(1)		(2)	(3)	H = TOTAL HEAD METRES COLUMN OF WATER												
65-125/40	4	113	112	O	77,9	14,4		14,5	13,7	12,2	10,3	8,0						
65-125/55	5,5	127	125,5	O	79,7	19,5		19,4	18,4	16,7	14,5	11,7						
65-125/75	7,5	137	136	O	80,3	23,8		23,9	23,2	21,7	19,6	16,8	13,7	10,5				
65-125/92	9,2	146	143	O	81,4	28,3		28,1	27,4	26,2	24,4	22,1	19,2	16,1				
65-125/110A	11	146	143	O	81,4	28,3		28,1	27,4	26,2	24,4	22,1	19,2	16,1				
65-125/110	11	148	146	●	81,9	29,5		29,1	28,3	27,2	25,6	23,6	21,0	18,0	14,5			
65-160/75	7,5	145	144	O	79,1	27,0		26,5	25,3	23,2	20,2	16,6						
65-160/92	9,2	151	152	O	80,9	29,8		29,4	28,5	26,7	23,9	20,4	16,4					
65-160/110A	11	151	152	O	80,9	29,8		29,4	28,5	26,7	23,9	20,4	16,4					
65-160/110	11	159	160	O	81,4	33,3		33,0	32,1	30,5	27,9	24,6	20,5					
65-160/150	15	175	176	O	82,4	41,3		41,1	40,4	39,2	37,1	34,3	30,7	26,5				
65-160/185	18,5	180	180	●	83,4	44,7		44,3	43,7	42,5	40,7	38,2	35,1	31,3	26,8			
65-200/110	11	165	162	O	73,0	36,4		35,6	33,8	30,6	25,8	19,5						
65-200/150	15	177	177	O	77,4	43,1		42,8	41,6	39,1	35,2	29,7	22,8					
65-200/185	18,5	189	189	O	78,5	49,9		49,4	48,3	46,1	42,7	37,8	31,4					
65-200/220	22	199	199	O	79,2	55,9		55,6	54,6	52,7	49,6	45,0	38,9	31,0				
65-200/300	30	220	218	●	80,1	70,2		69,6	68,7	67,3	65,0	61,7	57,2	51,1	43,1			
65-250/220	22	195	192	O	76,0	51,0		53,7	52,4	50,0	46,7	42,3	36,6	29,1				
65-250/300	30	215	213	O	76,8	63,7		66,6	65,5	63,4	60,5	56,6	51,6	45,0	36,4			
65-250/370	37	229	226	O	79,1	73,3		77,2	76,4	74,6	72,0	68,7	64,5	59,1	52,0	42,5		
65-250/450	45	243	240	O	79,4	83,7		87,8	87,1	85,5	83,3	80,6	77,0	72,4	66,3	57,9	46,3	
65-250/550	55	258	255	●	80,3	98,5		99,7	99,1	97,9	95,9	93,3	89,8	85,2	79,4	72,0	62,8	51,4
65-315/550	55	272	272	O	68,0	103,6	103,8	103,3	101,6	98,7	94,7	89,6	83,4	75,7	66,0			
65-315/750	75	298	298	O	68,9	126,1		125,7	124,5	122,0	118,4	113,7	108,1	101,5	93,6	83,7		
65-315/900	90	315	315	●	69,2	142,4		141,7	140,8	138,7	135,4	130,9	125,4	119,0	111,5	102,7	91,7	

PUMP TYPE	P_N	Ø Impeller (mm)				Q = DELIVERY												
		STD	B	Ø	ηp %	l/s 0	11	18,4	26,2	34,1	41,9	49,8	57,7	65,5	73,4	81,2	89,1	97
						m^3/h 0	38	66	94	123	151	179	208	236	264	292	321	349
	kW	(1)		(2)	(3)	H = TOTAL HEAD METRES COLUMN OF WATER												
80-160/110	11	144	144	O	76,0	26,8		25,7	23,8	21,4	18,5	15,3	12,0					
80-160/150	15	158	158	O	79,5	33,4		32,4	31,1	29,0	26,3	22,9	19,1	15,1				
80-160/185	18,5	168	168	O	80,3	38,0		37,2	36,0	34,0	31,2	27,8	23,8	19,6				
80-160/220	22	177	177	●	80,8	42,3		41,6	40,5	38,8	36,4	33,3	29,5	25,3	20,7			
80-200/220	22	181	177	O	79,7	43,5		43,7	42,8	40,9	38,0	34,2	29,7					
80-200/300	30	195	192	O	81,8	52,1		52,1	51,6	50,2	47,8	44,3	40,0	34,9				
80-200/370	37	208	204	O	82,6	60,5		60,2	59,5	58,0	55,8	52,7	48,7	43,8				
80-200/450	45	219	216	●	83,3	67,8		67,7	67,1	66,0	64,1	61,3	57,7	53,1	47,6			
80-250/370	37	214	211	O	80,6	65,0		65,8	64,4	62,0	58,8	54,6	49,5					
80-250/450	45	227	224	O	81,8	73,9		75,1	74,3	72,4	69,4	65,2	60,1	54,2				
80-250/550	55	241	238	O	82,3	83,5		85,1	84,3	82,6	79,9	76,0	71,2	65,5	59,0			
80-250/750	75	259	256	●	83,6	98,8			98,1	96,9	94,9	91,8	87,6	82,2	75,9	68,6		
80-316/900	90	280	280	O	76,3	110,7	110,2	110,0	109,9	109,0	106,7	102,7	97,1	90,3	82,8	74,1		
80-316/1100	110	298	298	O	76,7	125,2		124,5	124,3	123,8	122,5	119,9	115,6	109,8	102,5	94,0	84,5	
80-316/1320	132	310	310	O	77,7	135,1		134,7	134,6	134,1	132,9	130,8	127,4	122,7	116,5	108,7	99,5	
80-316/1600	160	321	321	●	77,9	146,1		145,4	145,3	144,9	143,8	141,8	138,6	134,2	128,5	121,3	112,7	102,7

Hydraulic performances in compliance with ISO 9906:2012 - Grade 3B (ex ISO 9906:1999 - Annex A)

Nsc-65-80_2p50-en_f_th

(1) **STD** = Cast iron/Stainless steel - **B** = Bronze (2) ● = Full impeller diameter - **O** = Trimmed impeller diameter (3) Hydraulic efficiency of pump.

LOWARA
a xylem brand

e-NSC 100, 125 SERIES
HYDRAULIC PERFORMANCE TABLE AT 50 Hz, 2 POLES

PUMP TYPE	P_N	Ø Impeller (mm)				Q = DELIVERY												
		STD	B	Ø	ηp %	l/s 0	11	22,5	33,8	45,1	56,3	67,6	78,9	90,2	101,4	112,7	124	135
						m^3/h 0	40	81	122	162	203	243	284	325	365	406	446	487
	kW	(1)		(2)	(3)	H = TOTAL HEAD METRES COLUMN OF WATER												
100-160/150	15	144	144	○	76,7	24,7	24,8	24,6	23,8	22,3	19,9	16,6	12,6					
100-160/185	18,5	156	156	○	79,7	29,1		28,7	28,2	26,9	24,6	21,3	17,1					
100-160/220	22	167	167	○	80,5	34,1		33,4	32,8	31,5	29,3	26,0	21,7	16,7				
100-160/300	30	187	187	●	83,8	44,1		42,7	41,9	40,6	38,7	35,9	32,1	27,1				
100-200/300	30	188	188	○	79,7	46,5		45,7	44,8	42,7	39,2	34,3	28,1	21,0				
100-200/370	37	202	202	○	82,0	53,9		53,4	52,8	51,2	48,2	43,8	38,0	31,0				
100-200/450	45	213	213	○	83,4	60,4		59,8	59,5	58,3	55,7	51,8	46,4	39,7	31,8			
100-200/550	55	227	227	●	84,6	69,2		68,9	68,2	66,9	64,7	61,3	56,6	50,6	43,0			
100-250/450	45	213	213	○	80,4	58,7		58,3	58,0	56,9	54,4	50,3	44,8	38,5	31,5			
100-250/550	55	227	227	○	83,1	67,8		67,7	67,4	66,2	64,0	60,5	55,7	49,6	42,4			
100-250/750	75	249	249	○	84,3	82,8		82,7	82,5	81,8	80,0	76,9	72,4	66,7	60,2	52,9		
100-250/900	90	259	259	●	85,0	90,1		90,1	89,8	88,8	87,0	84,0	79,8	74,4	67,6	59,6		
100-316/1100	110	270	270	○	78,6	104,7		104,3	103,5	101,9	99,3	95,6	90,5	83,7	74,6	62,4		
100-316/1320	132	286	286	○	79,9	116,6		116,2	115,7	114,2	111,8	108,5	104,2	98,6	91,4	81,5	67,3	
100-316/1600	160	302	302	●	80,8	131,3		130,9	130,8	129,9	128,0	124,8	120,4	115,0	108,8	101,5	91,8	77,0

PUMP TYPE	P_N	Ø Impeller (mm)				Q = DELIVERY												
		STD	B	Ø	ηp %	l/s 0	24	37,6	51,6	65,6	79,6	93,6	107,7	121,7	135,7	149,7	163,8	178
						m^3/h 0	85	135	186	236	287	337	388	438	489	539	590	640
	kW	(1)		(2)	(3)	H = TOTAL HEAD METRES COLUMN OF WATER												
125-200/450	45	179	179	○	80,4	34,9	34,5	34,5	34,4	34,2	33,8	33,1	31,7	29,6	26,6	22,3		
125-200/550	55	195	195	○	83,1	43,1		43,0	43,0	42,7	42,1	40,9	39,0	36,2	32,6	28,4		
125-200/750	75	215	215	○	84,4	55,1		54,9	54,9	54,7	54,2	53,2	51,6	49,3	46,1	42,0	37,1	
125-200/900	90	225	225	●	85,7	61,8		61,6	61,5	61,2	60,7	59,8	58,3	56,1	53,0	49,1	44,5	39,3
125-315/1100	110	250	250	○	81,4	84,0		83,8	83,2	81,6	78,7	74,3	68,2	60,4	51,0			
125-315/1320	132	265	265	○	81,1	96,8		96,7	96,2	95,0	92,6	89,0	83,9	77,1	68,4			
125-315/1600	160	280	280	○	81,9	109,8		109,8	109,5	108,6	106,9	104,0	99,7	93,8	86,1	76,4		
125-315/2000	200	290	290	●	82,9	118,9		119,0	118,8	118,1	116,7	114,3	110,6	105,4	98,3	89,3	78,3	

Hydraulic performances in compliance with ISO 9906:2012 - Grade 3B (ex ISO 9906:1999 - Annex A)

Nsc-100-125_2p50-en_e_th

(1) **STD** = Cast iron/Stainless steel - **B** = Bronze (2) ● = Full impeller diameter - **O** = Trimmed impeller diameter (3) Hydraulic efficiency of pump.

LOWARA
a xylem brand

e-NSC SERIES
HYDRAULIC PERFORMANCE RANGE AT 50 Hz, 4 POLES

NSC	~ 1450 [rpm]	ISO 9906:2012 - Grade 3B

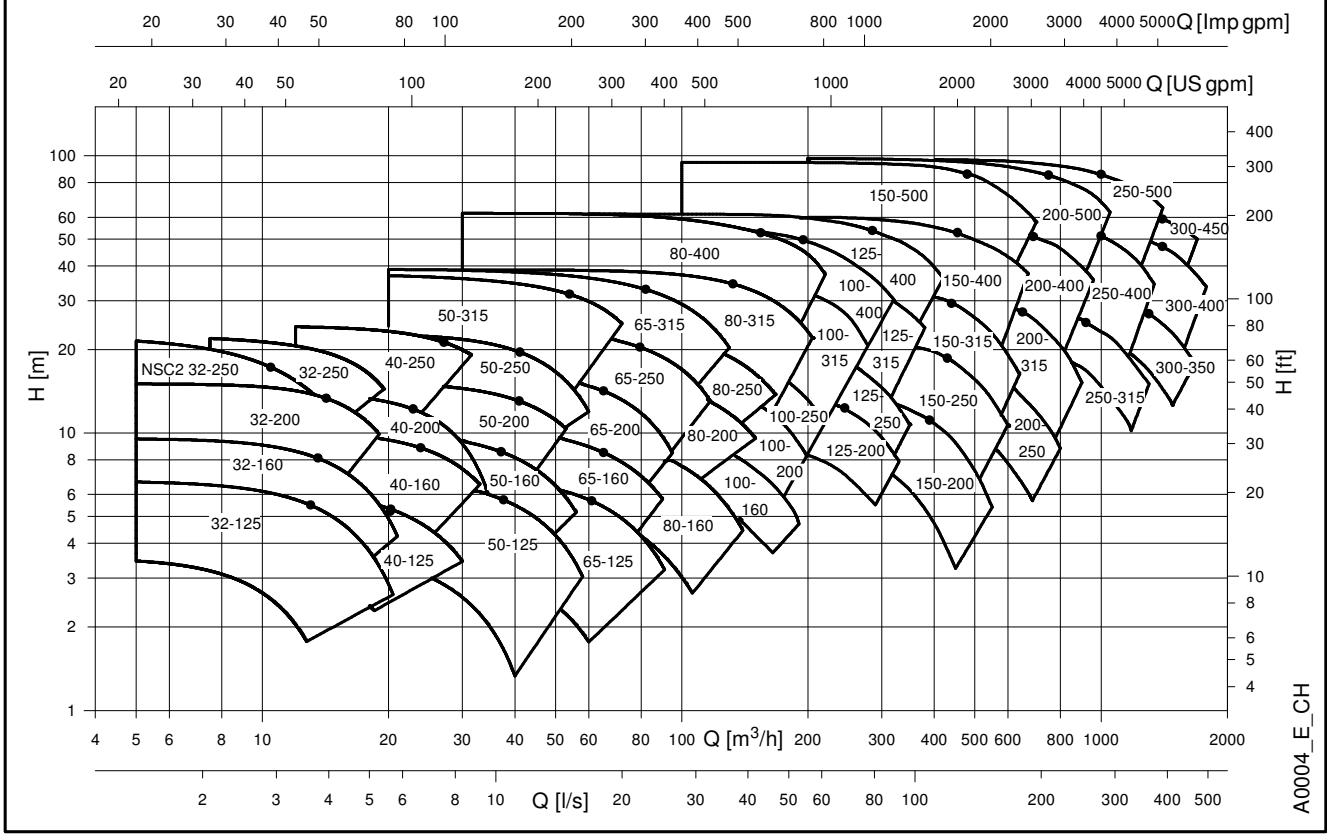

LOWARA
a xylem brand

e-NSC 32, 40, 50 SERIES
HYDRAULIC PERFORMANCE RANGE AT 50 Hz, 4 POLES

PUMP TYPE	P_N kW	Ø Impeller (mm) STD (1)	B (1)	Ø (2)	ηp % (3)	Q = DELIVERY l/s 0	0,9	1,3	1,8	2,2	2,7	3,1	3,6	4,0	4,5	4,9	5,4	5,8
						m^3/h 0	3	5	6	8	10	11	13	14	16	18	19	21
						H = TOTAL HEAD METRES COLUMN OF WATER												
32-125/02B	0,25	113	-	O	56,9	3,5	3,5	3,5	3,3	3,1	2,7	2,3						
32-125/02A	0,25	123	-	O	61,1	4,3		4,3	4,2	4,0	3,7	3,3	2,8	2,2				
32-125/02	0,25	133	-	O	63,4	5,3		5,4	5,3	5,1	4,9	4,5	4,1	3,6	2,9			
32-125/03	0,37	145	-	●	64,5	6,7			6,6	6,4	6,2	5,9	5,5	5,1	4,5	3,8	3,1	
32-160/02	0,25	137	-	O	58,5	5,5		5,5	5,4	5,1	4,8	4,3	3,7	3,0				
32-160/03	0,37	150	-	O	62,1	7,0		6,9	6,8	6,6	6,3	5,9	5,3	4,7	3,9			
32-160/05A	0,55	160,5	-	O	63,3	8,4		8,4	8,4	8,2	8,0	7,6	7,1	6,5	5,8	5,0	4,0	
32-160/05	0,55	171	-	●	63,4	9,5			9,5	9,3	9,1	8,8	8,3	7,8	7,1	6,2	5,3	4,2
32-200/05A	0,55	158	-	O	54,3	7,9		7,9	7,7	7,4	6,7	5,9	4,9					
32-200/05	0,55	171	-	O	56,5	9,5		9,4	9,3	9,0	8,5	7,7	6,8	5,7				
32-200/07	0,75	186	-	O	58,5	11,9		11,9	11,8	11,6	11,3	10,8	10,0	9,1	7,9			
32-200/11	1,1	205	-	●	60,6	15,1			15,0	14,9	14,7	14,4	13,9	13,2	12,2	11,0		
NSC2 32-250/11A	1,10	177	-	O	47,3	18,7		17,0	16,1	14,8	13,3	11,5	9,6					
NSC2 32-250/11	1,1	195	-	●	50,0	23,3		21,6	20,8	19,7	18,2	16,4	14,3	12,0				
32-250/11A	1,1	214	-	O	44,4	14,5			14,1	13,7	13,1	12,2	11,1					
32-250/15B	1,5	214	-	O	44,4	14,5			14,1	13,7	13,1	12,2	11,1					
32-250/11	1,1	226,5	-	O	45,7	16,3			15,9	15,5	15,0	14,2	13,2	11,9				
32-250/15A	1,5	226,5	-	O	45,7	16,3			15,9	15,5	15,0	14,2	13,2	11,9				
32-250/15	1,5	239	-	O	46,1	18,7				17,8	17,3	16,6	15,7	14,5	13,0			
32-250/22	2,2	259	-	●	46,7	22,6				21,9	21,5	20,9	20,2	19,3	18,1	16,6	14,6	

PUMP TYPE	P_N kW	Ø Impeller (mm) STD (1)	B (1)	Ø (2)	ηp % (3)	Q = DELIVERY l/s 0	1,3	2,1	2,8	3,6	4,3	5,0	5,8	6,5	7,2	8,0	8,7	9,4
						m^3/h 0	5	7	10	13	15	18	21	23	26	29	31	34
						H = TOTAL HEAD METRES COLUMN OF WATER												
40-125/02A	0,25	105	-	O	66,1	3,6	3,6	3,5	3,4	3,1	2,8	2,4						
40-125/02	0,25	118	-	O	70,5	4,6		4,4	4,3	4,1	3,8	3,4	2,9					
40-125/03	0,37	130	-	O	73,3	5,6		5,5	5,4	5,3	5,0	4,7	4,3	3,8	3,2			
40-125/05	0,55	135	-	●	74,0	6,5			6,3	6,1	5,9	5,6	5,2	4,8	4,3	3,7		
40-160/03	0,37	127	-	O	66,6	5,2		5,3	5,2	5,0	4,6	4,1	3,6					
40-160/05	0,55	139	-	O	69,0	6,6		6,6	6,6	6,4	6,2	5,8	5,3	4,7				
40-160/07	0,75	154	-	O	70,8	8,3		8,4	8,4	8,4	8,2	7,9	7,6	7,1	6,4	5,7		
40-160/11	1,1	165	-	●	71,1	10,1			10,1	10,0	9,9	9,6	9,3	8,9	8,4	7,8	7,0	
40-200/07	0,75	165	-	O	59,5	9,0		8,9	8,8	8,6	8,2	7,5	6,5	5,2				
40-200/11	1,1	179	-	O	60,6	10,9		11,0	11,0	10,9	10,6	10,1	9,3	8,2	6,9			
40-200/15A	1,5	189	-	O	60,9	12,4			12,5	12,4	12,2	11,7	11,1	10,2	9,0	7,4		
40-200/15	1,5	199	-	●	62,8	14,0			14,0	13,9	13,6	13,3	12,8	12,0	11,1	9,8	8,3	6,4
40-250/11	1,1	199	-	O	57,9	13,5			13,3	12,9	12,4	11,6	10,6					
40-250/15A	1,5	199	-	O	57,9	13,5			13,3	12,9	12,4	11,6	10,6					
40-250/15	1,5	210	-	O	58,8	15,1			14,9	14,7	14,3	13,6	12,7	11,6				
40-250/22A	1,5	228	-	O	59,1	18,0			18,0	17,8	17,5	17,1	16,4	15,5	14,3			
40-250/22	2,2	243	-	O	60,4	20,6				20,5	20,3	19,9	19,4	18,6	17,6	16,4		
40-250/30	3	257,5	-	●	63,9	24,4				24,1	23,9	23,6	23,1	22,5	21,6	20,6	19,2	

PUMP TYPE	P_N kW	Ø Impeller (mm) STD (1)	B (1)	Ø (2)	ηp % (3)	Q = DELIVERY l/s 0	2,3	3,9	5,5	7,2	8,8	10,4	12,0	13,6	15,2	16,8	18,4	20,0
						m^3/h 0	8	14	20	26	32	37	43	49	55	60	66	72
						H = TOTAL HEAD METRES COLUMN OF WATER												
50-125/03	0,37	118	-	O	67,5	4,1		3,7	3,4	3,0	2,4	1,7						
50-125/05	0,55	130	-	O	69,8	5,2		4,8	4,5	4,1	3,5	2,8	2,0					
50-125/07	0,75	144	-	O	71,0	6,7		6,3	6,0	5,7	5,2	4,6	3,9	3,0				
50-125/11	1,1	148	-	●	74,6	7,6		7,2	7,0	6,7	6,3	5,8	5,2	4,4	3,6			
50-160/07	0,75	144	-	O	69,9	6,8		6,4	6,1	5,6	4,9	4,1						
50-160/11A	1,1	159	-	O	70,4	8,4		8,1	7,8	7,3	6,7	5,9	4,9					
50-160/11	1,1	170	-	O	71,8	9,6		9,3	9,0	8,6	8,0	7,3	6,4	5,4				
50-160/15	1,5	176	-	●	72,3	10,8		10,3	10,0	9,7	9,2	8,5	7,7	6,7	5,5			
50-200/11	1,1	168	-	O	68,9	8,9		9,1	9,0	8,7	8,0	6,9						
50-200/15A	1,5	168	-	O	68,9	8,9		9,1	9,0	8,7	8,0	6,9						
50-200/15	1,5	179	-	O	70,5	10,4		10,6	10,6	10,3	9,7	8,7	7,4					
50-200/22A	2,2	197	-	O	72,0	13,1		13,3	13,3	13,1	12,6	11,8	10,7	9,2				
50-200/22	2,2	209	-	●	73,3	15,1		15,1	15,1	14,8	14,4	13,7	12,7	11,4				
50-250/22A	2,2	208	-	O	67,2	14,7		14,6	14,3	13,6	12,6	11,1	9,0					
50-250/22	2,2	220	-	O	68,3	16,6		16,5	16,2	15,7	14,7	13,3	11,4					
50-250/30	3	232	-	O	68,5	18,7		18,6	18,3	17,8	16,9	15,7	13,9	11,6				
50-250/40	4	256	-	●	68,6	22,8			22,6	22,2	21,6	20,5	19,0	17,1	14,6			
50-315/40	4	256	-	O	60,0	22,6	22,5	22,2	21,7	21,0	20,2	19,2	17,9	16,1				
50-315/55	5,5	278	-	O	61,1	27,4		27,0	26,6	25,9	25,1	24,1	23,0	21,7	19,8	17,0		
50-315/75	7,5	304	-	O	63,2	33,3		33,1	32,8	32,2	31,4	30,4	29,4	28,3	27,0	25,2	22,5	
50-315/110	11	322	-	●	63,3	37,6		37,3	37,0	36,5	35,9	35,1	34,1	32,9	31,5	29,7	27,5	24,8

Hydraulic performances in compliance with ISO 9906:2012 - Grade 3B (ex ISO 9906:1999 - Annex A)

Nsc-32-40-50_4p50-en_e_th

(1) **STD** = Cast iron/Stainless steel - **B** = Bronze (2) ● = Full impeller diameter - **O** = Trimmed impeller diameter (3) Hydraulic efficiency of pump.

LOWARA
a xylem brand

e-NSC 65, 80 SERIES
HYDRAULIC PERFORMANCE RANGE AT 50 Hz, 4 POLES

PUMP TYPE	P_N	Ø Impeller (mm)				Q = DELIVERY												
		STD	B	Ø	ηp %	l/s 0	3,3	6,3	9,3	12,2	15,2	18,2	21,2	24,2	27,2	30,1	33,1	36,1
						m^3/h 0	12	23	33	44	55	66	76	87	98	109	119	130
	kW	(1)		(2)	(3)	H = TOTAL HEAD METRES COLUMN OF WATER												
65-125/05	0,55	113	112	O	75,0	3,5		3,4	3,1	2,7	2,1							
65-125/07	0,75	127	126	O	77,0	4,9		4,7	4,4	3,9	3,2	2,4						
65-125/11	1,1	137	136	O	78,3	5,8		5,8	5,6	5,1	4,5	3,6	2,7					
65-125/15	1,5	148	146	●	79,5	7,2		7,1	6,9	6,5	6,0	5,4	4,6	3,6				
65-160/11A	1,1	145	144	O	77,1	6,4		6,4	6,0	5,4	4,4	3,4						
65-160/15B	1,5	145	144	O	77,1	6,4		6,4	6,0	5,4	4,4	3,4						
65-160/11	1,1	151	152	O	78,0	7,2		7,0	6,7	6,1	5,2	4,1						
65-160/15A	1,5	151	152	O	78,0	7,2		7,0	6,7	6,1	5,2	4,1						
65-160/15	1,5	159	160	O	79,6	8,2		8,0	7,7	7,1	6,3	5,3						
65-160/22A	2,2	175	176	O	81,8	10,2		10,1	9,9	9,4	8,8	7,9	6,8	5,6				
65-160/22	2,2	180	180	●	82,1	10,9		10,8	10,5	10,0	9,3	8,4	7,4	6,1				
65-200/15	1,5	165	162	O	73,1	8,9	8,9	8,7	8,2	7,2	5,7							
65-200/22A	2,2	177	177	O	74,6	10,6		10,5	10,0	9,2	7,8	6,0						
65-200/22	2,2	189	189	O	76,9	12,1		12,0	11,6	10,8	9,6	7,9	5,7					
65-200/30	3	199	199	O	78,0	13,6		13,6	13,2	12,6	11,5	9,9	7,8					
65-200/40	4	220	218	●	80,0	17,0		16,9	16,7	16,1	15,3	14,1	12,5	10,3				
65-250/30	3	195	192	O	73,9	12,6		13,2	12,8	12,0	10,8	9,3	7,3					
65-250/40	4	215	213	O	74,3	15,7		16,2	15,8	15,1	14,1	12,7	11,0	8,9				
65-250/55A	5,5	229	226	O	76,0	18,1		19,0	18,7	18,1	17,3	16,1	14,6	12,8	10,5			
65-250/55	5,5	243	240	O	77,2	20,7		21,3	21,2	20,7	20,0	18,9	17,5	15,8	13,7			
65-250/75	7,5	258	255	●	77,6	24,3		24,6	24,3	23,8	23,0	22,0	20,8	19,2	17,4	15,2		
65-315/55	5,5	260	260	O	68,1	22,7		22,4	21,7	20,8	19,6	18,0	15,7	12,7				
65-315/75	7,5	285	285	O	70,4	27,6		27,3	26,8	26,0	24,8	23,3	21,4	18,9	15,9			
65-315/110	11	315	315	O	71,4	34,7		34,5	34,0	33,3	32,3	31,0	29,3	27,2	24,6	21,4	17,3	
65-315/150	15	334	334	●	72,2	39,0		38,9	38,5	37,8	36,8	35,5	33,9	32,0	29,7	27,0	23,8	20,3

PUMP TYPE	P_N	Ø Impeller (mm)				Q = DELIVERY												
		STD	B	Ø	ηp %	l/s 0	5,6	10,7	15,7	20,8	25,8	30,9	35,9	40,9	46,0	51,0	56,1	61,1
						m^3/h 0	20	38	57	75	93	111	129	147	166	184	202	220
	kW	(1)		(2)	(3)	H = TOTAL HEAD METRES COLUMN OF WATER												
80-160/15	1,5	144	144	O	72,1	6,5		6,2	5,5	4,5	3,5							
80-160/22A	2,2	158	158	O	78,4	8,3		7,9	7,3	6,5	5,4	4,2						
80-160/22	2,2	168	168	O	79,0	9,3		9,0	8,5	7,6	6,5	5,2	3,8					
80-160/30	3	177	177	●	81,2	10,5		10,2	9,8	9,0	8,0	6,7	5,3					
80-200/30	3	181	177	O	77,1	10,8		10,6	10,1	9,3	8,2							
80-200/40	4	195	192	O	79,7	12,8		12,7	12,4	11,6	10,4	8,9						
80-200/55A	5,5	208	204	O	82,0	15,0		14,9	14,5	13,9	12,8	11,3						
80-200/55	5,5	219	216	●	82,5	16,9		16,5	16,2	15,6	14,7	13,5	11,8					
80-250/55A	5,5	214	211	O	80,0	16,4		16,0	15,4	14,4	13,1	11,3	9,1	6,5				
80-250/55	5,5	227	224	O	80,1	18,2		18,2	17,6	16,6	15,3	13,5						
80-250/75	7,5	241	238	O	80,8	21,0		20,7	20,2	19,4	18,1	16,4	14,4					
80-250/110	11	259	256	●	82,2	24,1		23,9	23,7	23,2	22,2	20,8	19,0	16,7				
80-315/110A	11	262	262	O	75,8	23,1		23,1	22,7	21,9	20,4	18,4	15,8	12,8	9,6			
80-315/110	11	280	280	O	76,0	26,6		26,6	26,4	25,7	24,5	22,8	20,4	17,5				
80-315/150	15	304	304	O	76,9	31,6		31,7	31,6	31,2	30,3	28,9	26,8	24,3	21,2			
80-315/185	18,5	321	321	O	77,2	35,5		35,6	35,5	35,2	34,4	33,2	31,4	29,1	26,2	22,7		
80-315/220	22	334	334	●	77,8	38,6		38,7	38,6	38,3	37,6	36,4	34,8	32,7	30,0	26,7		
80-400/185	18,5	338	338	O	69,9	39,1		39,0	38,2	37,0	35,3	33,3	30,6	27,0	22,0	15,0	5,1	
80-400/220	22	356	356	O	71,3	43,8	44,0	43,8	43,2	42,0	40,4	38,4	36,1	33,1	29,1			
80-400/300	30	388	388	O	72,5	53,1		52,8	52,6	51,7	50,2	48,3	46,1	43,7	40,8			
80-400/370	37	418	418	●	73,8	62,6		61,9	61,7	61,0	59,7	57,9	55,9	53,5	50,9	47,8		

Hydraulic performances in compliance with ISO 9906:2012 - Grade 3B (ex ISO 9906:1999 - Annex A)

Nsc-65-80_4p50-en_e_th

(1) **STD** = Cast iron/Stainless steel - **B** = Bronze (2) ● = Full impeller diameter - **O** = Trimmed impeller diameter (3) Hydraulic efficiency of pump.

LOWARA
a xylem brand

e-NSC 100-125-150 SERIES
HYDRAULIC PERFORMANCE RANGE AT 50 Hz, 4 POLES

PUMP TYPE	P_N	Ø Impeller (mm) STD	Ø B	Ø	ηp %	Q = DELIVERY l/s 0	5,6	12,6	19,7	26,8	33,8	40,9	48,0	55,1	62,1	69,2	76,3	83,3
						m^3/h 0	20	45	71	96	122	147	173	198	224	249	275	300
	kW	(1)		(2)	(3)	H = TOTAL HEAD METRES COLUMN OF WATER												
100-160/22A	2,2	144	144	O	75,9	5,9		5,9	5,6	4,9	3,7							
100-160/22	2,2	156	156	O	77,4	6,9		6,9	6,6	6,0	4,8	3,5						
100-160/30	3	176	176	O	81,5	9,1		9,0	8,8	8,1	7,0	5,6	4,0					
100-160/40	4	190	190	●	83,6	10,8		10,6	10,4	9,8	8,9	7,6	6,0					
100-200/40	4,0	197	197	O	82,6	12,2		12,1	11,8	11,0	9,6	7,5	5,1					
100-200/55	5,5	213	213	O	83,8	14,8		14,6	14,5	13,8	12,6	10,7	8,4					
100-200/75	7,5	227	227	●	84,3	16,9		16,7	16,5	15,9	14,8	13,1	11,0	8,4				
100-250/55	5,5	213	213	O	80,6	14,1		14,1	13,8	13,1	11,9	10,1	8,0					
100-250/75	7,5	237	237	O	83,1	17,8		17,9	17,7	17,2	16,2	14,6	12,5	10,1				
100-250/110	11	259	259	●	84,1	21,9		21,9	21,7	21,1	20,0	18,4	16,3	13,8				
100-315/110	11	260	260	O	78,9	23,5	23,5	23,4	23,1	22,4	21,1	19,2	16,5	12,6				
100-315/150	15	284	284	O	79,5	28,0		28,0	27,8	27,2	26,0	24,4	22,4	19,5				
100-315/185	18,5	298	298	O	79,9	31,1		31,0	30,9	30,3	29,3	27,8	26,1	23,8	20,4			
100-315/220	22	312	312	O	80,6	34,3		34,2	34,1	33,7	32,8	31,4	29,6	27,6	25,0			
100-315/300	30	334	334	●	80,8	40,2		40,1	40,1	39,7	38,8	37,6	36,0	34,0	31,5	28,2		
100-400/300	30	375	375	O	76,8	47,4		46,5	45,8	44,9	43,7	42,1	40,0	37,4	34,3	30,6		
100-400/370	37	397	397	O	77,1	54,4		53,3	52,5	51,6	50,4	48,9	47,1	44,8	42,0	38,6	34,7	
100-400/450	45	420	420	●	76,9	61,3		60,0	59,4	58,6	57,3	55,7	53,8	51,6	49,0	45,8	42,0	37,3

PUMP TYPE	P_N	Ø Impeller (mm) STD	Ø B	Ø	ηp %	Q = DELIVERY l/s 0	11,9	21,4	30,9	40,5	50,0	59,5	69,0	78,6	88,1	97,6	107,1	116,7
						m^3/h 0	43	77	111	146	180	214	249	283	317	351	386	420
	kW	(1)		(2)	(3)	H = TOTAL HEAD METRES COLUMN OF WATER												
125-200/55	5,5	179	179	O	80,9	8,6		8,4	8,4	8,3	8,0	7,2	6,0					
125-200/75	7,5	204	204	O	83,5	11,9		11,8	11,8	11,6	11,2	10,3	9,0	7,5				
125-200/110	11	225	225	●	85,4	15,0		14,9	14,9	14,8	14,4	13,7	12,6	11,1	9,3			
125-250/75	7,5	210	210	O	84,5	13,6	13,5	13,4	13,3	12,9	12,1	10,6	8,6	6,3				
125-250/110	11	235	235	O	86,3	17,5		17,4	17,4	17,2	16,6	15,3	13,5	11,3	9,2			
125-250/150	15	259	259	●	88,3	22,0		21,7	21,7	21,5	21,0	20,0	18,5	16,5	14,1	11,6		
125-315/185	18,5	277	277	O	83,7	25,6		25,7	25,6	25,3	24,4	22,8	20,1	16,4	11,9			
125-315/220	22	290	290	O	84,3	28,3		28,6	28,5	28,2	27,5	26,1	23,8	20,7	16,6			
125-315/300	30	315	315	O	85,4	34,8		35,1	35,0	34,8	34,1	33,0	31,4	29,1	26,0	22,1		
125-315/370	37	334	334	●	86,4	39,6		39,8	39,9	39,7	39,2	38,2	36,8	34,8	32,1	28,7	24,6	
125-400/370	37	353	353	O	78,0	43,4		43,9	43,8	43,2	41,9	39,9	37,0	33,0	28,0			
125-400/450	45	374	374	O	78,8	48,7		49,4	49,6	49,3	48,3	46,4	43,7	40,0	35,4	30,0		
125-400/550	55	394	394	O	79,1	54,4		55,6	55,8	55,5	54,6	53,0	50,7	47,6	43,6	38,7		
125-400/750	75	422	422	●	79,9	63,4		64,8	64,7	64,2	63,3	61,8	59,8	57,1	53,8	49,8	45,0	39,3

PUMP TYPE	P_N	Ø Impeller (mm) STD	Ø B	Ø	ηp %	Q = DELIVERY l/s 0	16,7	33,8	51,0	68,2	85,4	102,5	119,7	136,9	154,0	171,2	188,4	205,6
						m^3/h 0	60	122	184	245	307	369	431	493	555	616	678	740
	kW	(1)		(2)	(3)	H = TOTAL HEAD METRES COLUMN OF WATER												
150-200/110A	11	200	200	O	78,8	11,8		11,3	10,5	9,4	8,3	7,0	5,4					
150-200/110	11	217	217	O	80,7	14,0		13,4	12,5	11,4	10,1	8,7	7,0	4,9				
150-200/150A	15	227	227	O	82,0	15,2		14,5	13,8	12,9	11,7	10,2	8,4	6,4				
150-200/150	15	237	237	●	83,9	16,3		15,6	15,1	14,4	13,4	12,0	10,3	8,2				
150-250/150	15	238	238	O	80,3	17,2	17,0	16,7	16,1	15,1	13,7	11,6	9,1					
150-250/185	18,5	253	253	O	82,7	19,8		19,1	18,7	17,9	16,6	14,8	12,4	9,5				
150-250/220	22	265	265	O	84,6	22,1		21,4	21,0	20,4	19,3	17,6	15,4	12,6				
150-250/300	30	282	282	●	86,2	26,4		25,3	24,7	23,9	22,9	21,5	19,6	17,3	14,4			
150-315/300	30	291	291	O	84,2	27,7		27,7	27,6	27,0	25,7	23,5	20,4	16,5				
150-315/370	37	310	310	O	85,1	31,9		31,8	31,6	31,1	30,0	28,1	25,3	21,5	17,1			
150-315/450	45	330	330	●	86,3	36,6		36,2	36,1	35,7	34,7	32,9	30,4	27,2	23,2			
150-400/450	45	327	327	O	81,8	36,7		36,9	36,6	35,6	34,0	31,7	28,6	24,6				
150-400/550	55	346	346	O	84,4	41,2		41,6	41,5	40,9	39,5	37,5	34,6	30,9	26,3			
150-400/750	75	377	377	O	84,9	50,3		50,8	50,9	50,4	49,1	47,0	44,4	41,3	37,7	33,3		
150-400/900	90	398	398	O	85,3	56,5		56,9	57,0	56,5	55,5	53,7	51,4	48,5	45,1	41,0		
150-400/1100	110	423	423	●	85,5	63,9		64,4	64,3	63,9	63,0	61,5	59,4	56,6	53,2	49,1	44,4	
150-500/900	90	420	420	O	75,1	60,9		61,6	61,8	61,1	59,0	55,2	49,6	42,6	34,5			
150-500/1100	110	443	443	O	75,4	68,5		68,9	69,3	69,0	67,5	64,4	59,5	52,7	44,6	36,1		
150-500/1320	132	467	467	O	76,5	76,9		77,6	78,1	78,0	76,9	74,3	70,1	64,0	56,3	47,3		
150-500/1600	160	495	495	O	77,9	87,0		87,9	88,4	88,5	87,8	86,0	82,7	77,6	70,7	62,1	52,6	
150-500/2000	200	516	516	●	78,6	95,1		95,9	96,5	96,7	96,1	94,4	91,4	86,7	80,4	72,6	63,5	53,7

Hydraulic performances in compliance with ISO 9906:2012 - Grade 3B (ex ISO 9906:1999 - Annex A)

Nsc-100-150_4p50-en_d_th

(1) **STD** = Cast iron/Stainless steel - **B** = Bronze (2) ● = Full impeller diameter - **O** = Trimmed impeller diameter (3) Hydraulic efficiency of pump.

LOWARA
a xylem brand

e-NSC 200-250-300 SERIES
HYDRAULIC PERFORMANCE RANGE AT 50 Hz, 4 POLES

PUMP TYPE	P_N	Ø Impeller (mm)				Q = DELIVERY												
		STD	B	Ø	ηp %	l/s 0	38,1	62,4	86,7	111,0	135,3	159,6	184,0	208,3	232,6	256,9	281,2	305,6
						m^3/h 0	137	225	312	400	487	575	662	750	837	925	1012	1100
	kW	(1)		(2)	(3)	H = TOTAL HEAD METRES COLUMN OF WATER												
200-250/185	18,5	228	228	O	78,6	15,7	15,3	14,8	13,7	12,2	10,6	8,9	6,8					
200-250/220	22	245	245	O	81,6	18,5		17,2	16,2	14,8	13,1	11,1	8,7					
200-250/300A	30	260	260	O	83,9	21,2		19,7	18,7	17,4	15,8	13,7	11,2	8,4				
200-250/300	30	271	271	●	85,0	23,1		21,5	20,5	19,4	17,9	16,0	13,6	10,8				
200-315/300	30	268	268	O	80,7	22,1	21,7	21,3	20,7	19,6	17,7	14,9	11,3					
200-315/450	37	287	287	O	82,9	25,3		24,6	24,2	23,3	21,7	19,3	15,9	11,8				
200-315/370	45	306	306	O	84,8	29,0		28,3	28,1	27,4	26,1	23,9	20,8	16,8	12,3			
200-315/550	55	328	328	O	86,1	34,1		33,2	32,8	32,1	30,9	28,8	26,0	22,2	17,8			
200-315/750	75	333	333	●	86,3	35,1		34,3	34,0	33,3	32,0	29,9	27,1	23,4	19,1			
200-400/750A	75	328	328	O	83,4	37,2		37,0	36,7	35,7	33,8	31,0	27,0	22,0				
200-400/750	75	342	342	O	83,5	41,0		40,6	40,3	39,4	37,7	35,0	31,3	26,5				
200-400/900	90	362	362	O	84,2	46,5		46,0	45,7	44,9	43,4	41,1	37,7	33,3	27,9			
200-400/1100	110	383	383	O	85,4	52,4		52,2	51,9	51,2	50,0	48,0	45,1	41,2	36,2			
200-400/1320	132	409	409	●	85,5	60,1		59,8	59,6	59,0	57,9	56,1	53,5	50,0	45,4	39,6		
200-500/1320	132	425	425	O	80,5	64,3		64,4	63,7	62,5	60,2	56,4	50,8	43,3	34,2			
200-500/1600	160	450	450	O	81,2	72,8		72,7	72,2	71,0	69,0	65,8	61,2	55,0	46,9			
200-500/2000	200	480	480	O	82,6	83,8		83,6	83,1	82,1	80,3	77,7	74,0	69,1	62,5	53,8		
200-500/2500	250	508	508	O	83,0	94,3		93,8	93,3	92,3	90,7	88,3	85,1	81,0	75,8	69,2	60,7	
200-500/3150	315	523	523	●	83,3	100,3		99,6	99,1	98,1	96,4	94,1	91,0	87,2	82,5	76,6	69,1	59,6

PUMP TYPE	P_N	Ø Impeller (mm)				Q = DELIVERY												
		STD	B	Ø	ηp %	l/s 0	61,9	94,2	126,4	158,7	190,9	223,2	255,4	287,7	319,9	352,2	384,4	416,7
						m^3/h 0	223	339	455	571	687	803	920	1036	1152	1268	1384	1500
	kW	(1)		(2)	(3)	H = TOTAL HEAD METRES COLUMN OF WATER												
250-315/370	37	255	255	O	81,1	19,4	19,2	18,5	17,7	16,7	15,3	13,3	10,4					
250-315/450	45	273	273	O	83,1	22,7		21,8	21,0	20,1	18,9	16,9	13,8	10,0				
250-315/550	55	290	290	O	84,5	26,1		24,8	24,3	23,6	22,6	20,7	18,0	14,5				
250-315/750	75	316	316	●	85,7	31,5		29,9	29,5	29,1	28,4	27,1	25,0	22,1	18,6			
250-400/750	75	325	325	O	82,0	35,4		35,2	34,3	32,5	29,9	26,3	21,8	16,4				
250-400/900	90	344	344	O	82,9	39,8		39,8	39,2	37,9	35,6	32,3	27,9	22,5				
250-400/1100	110	365	365	O	84,0	45,1		45,0	44,8	43,8	42,0	39,1	35,1	30,0	23,9			
250-400/1320	132	386	386	O	85,1	50,8		50,6	50,4	49,7	48,1	45,6	42,0	37,3	31,5			
250-400/1600	160	407	407	O	85,8	56,9		56,4	56,2	55,6	54,2	52,0	48,9	44,7	39,4	33,0		
250-400/2000	200	425	425	●	86,5	62,7		62,0	61,6	60,9	59,6	57,6	54,9	51,2	46,5	40,6		
250-500/1600	160	420	420	O	82,3	61,1		61,6	60,8	59,2	56,4	52,2	46,3	38,1				
250-500/2000	200	448	448	O	84,5	70,3		71,0	70,7	69,6	67,6	64,1	59,0	51,8	42,3			
250-500/2500	250	477	477	O	84,6	80,5		81,0	80,6	79,7	78,2	75,6	71,8	66,3	58,8	48,9		
250-500/3150	315	508	508	O	84,9	92,6		93,3	92,7	91,6	90,0	87,6	84,5	80,3	74,8	67,8	58,9	
250-500/3550	355	523	523	●	85,0	98,3		99,0	98,4	97,3	95,7	93,6	90,6	86,8	81,9	75,7	68,0	58,5

PUMP TYPE	P_N	Ø Impeller (mm)				Q = DELIVERY												
		STD	B	Ø	ηp %	l/s 0	92,8	132,3	171,9	211,4	251,0	290,5	330,1	369,6	409,1	448,7	488,2	527,8
						m^3/h 0	334	476	619	761	903	1046	1188	1331	1473	1615	1758	1900
	kW	(1)		(2)	(3)	H = TOTAL HEAD METRES COLUMN OF WATER												
300-350/750A	75	285	285	O	79,0	24,4		22,4	21,4	20,0	18,3	16,3	13,9	11,3	8,2			
300-350/750	75	315	315	O	82,2	30,5		28,1	26,8	25,3	23,4	21,2	18,7	15,9	12,7	9,1		
300-350/900	90	332	332	O	83,2	34,7		32,0	30,7	29,1	27,3	25,2	22,7	19,9	16,8	13,3		
300-350/1100	110	354	354	●	85,8	39,7		37,1	36,0	34,6	32,9	30,9	28,5	25,8	22,7	19,2	15,4	
300-400/1100	110	346	346	O	88,2	36,2		36,3	35,9	34,9	33,2	30,8	27,6	23,7	19,1			
300-400/1320	132	367	367	O	87,5	41,9		41,4	41,0	40,2	38,8	36,6	33,6	29,7	25,0	19,7		
300-400/1600	160	390	390	O	86,0	48,0		47,2	46,9	46,3	45,3	43,6	41,0	37,4	32,8	27,4	21,5	
300-400/2000	200	416	416	O	84,2	56,2		55,0	54,7	54,2	53,2	51,7	49,5	46,5	42,6	37,8	32,1	
300-400/2500	250	425	425	●	82,9	59,3		57,9	57,5	56,9	56,0	54,5	52,5	49,7	46,1	41,6	36,0	29,4
300-450/1600	160	404	404	O	86,6	52,5	53,1	52,5	51,4	49,8	47,6	44,8	41,5	37,5	32,9			
300-450/2000	200	430	430	O	88,0	60,7		60,2	59,4	58,1	56,3	53,8	50,7	46,9	42,3	36,9		
300-450/2500	250	456	456	O	88,1	69,1		69,0	68,0	66,7	65,0	62,9	60,3	57,0	53,1	48,1		
300-450/3150	315	470	470	●	89,0	74,9		73,5	72,8	71,6	70,0	67,9	65,4	62,4	58,8	54,5	49,3	

Hydraulic performances in compliance with ISO 9906:2012 - Grade 3B (ex ISO 9906:1999 - Annex A)

Nsc-200-300_4p50-en_d_th

(1) **STD** = Cast iron/Stainless steel - **B** = Bronze (2) ● = Full impeller diameter - **O** = Trimmed impeller diameter (3) Hydraulic efficiency of pump.

e-NSC SERIES
IDENTIFICATION OF GRAPH

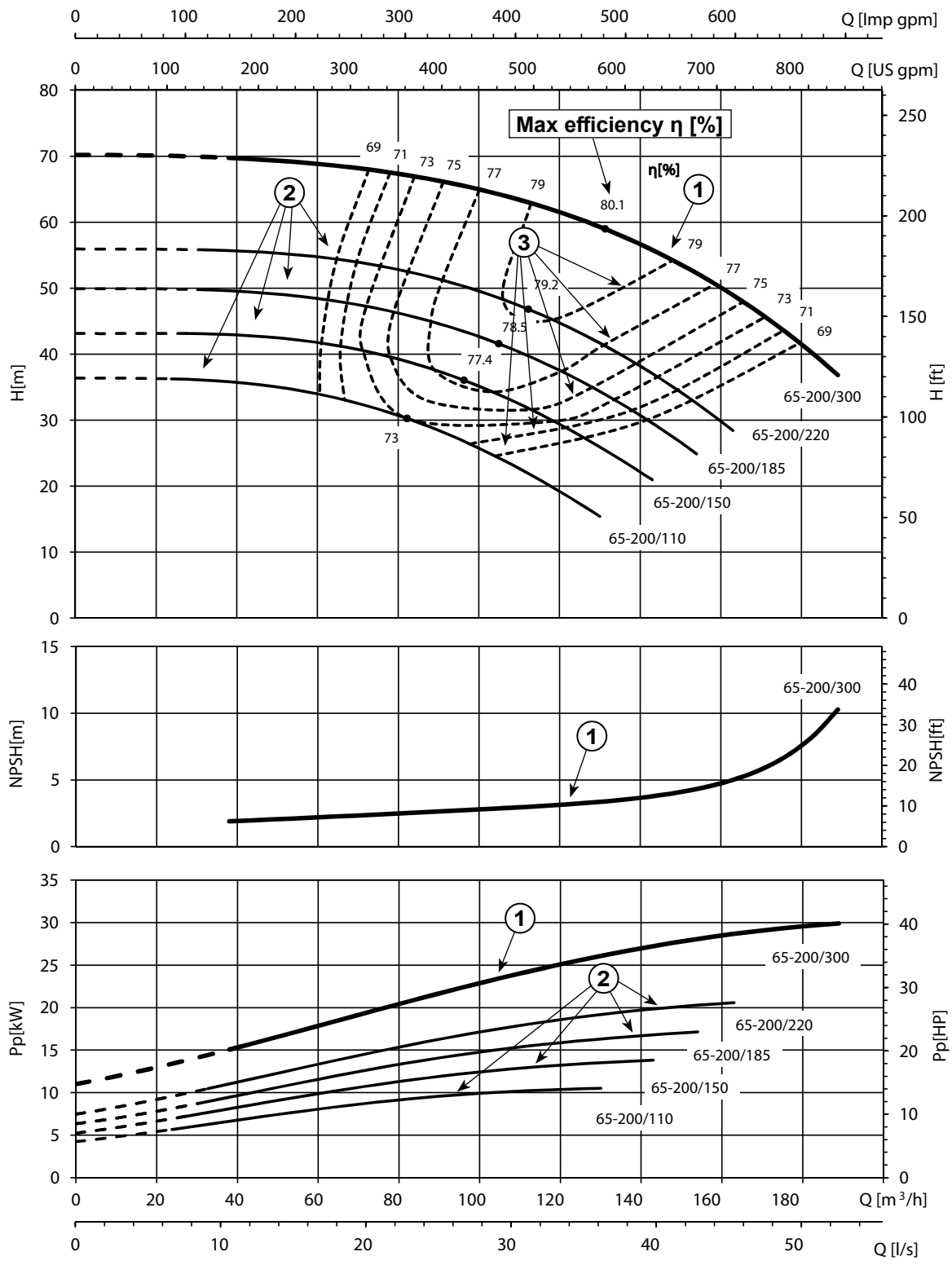

REF	TYPE	DESCRIPTION
①	———	Full Diameter impeller operating range
②	———	Trimmed diameter impeller operating range
③	- - - - -	Isoefficiency curves

LOWARA
a xylem brand

e-NSC SERIES
OPERATING CHARACTERISTICS AT 50 Hz, 2 POLES

NSC 32-125	~ 2900 [rpm]	ISO 9906:2012 - Grade 3B

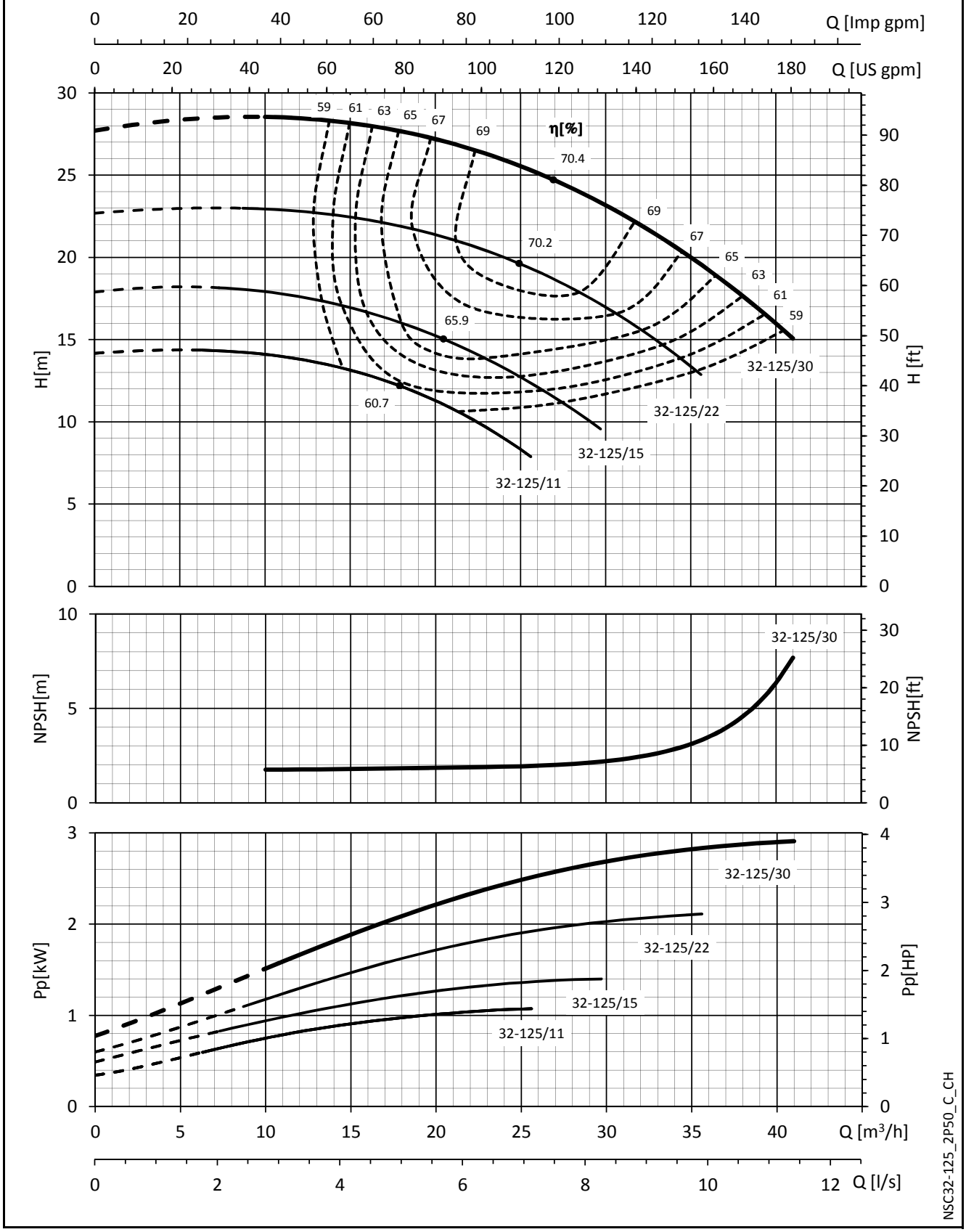

The NPSH values are laboratory values; for practical use we suggest increasing these values by 0,5 m.
These performances are valid for liquids with density ρ = 1,0 Kg/dm³ and kinematic viscosity ν = 1 mm²/sec.

LOWARA
a xylem brand

e-NSC SERIES
OPERATING CHARACTERISTICS AT 50 Hz, 2 POLES

NSC 32-160	~ 2900 [rpm]	ISO 9906:2012 - Grade 3B

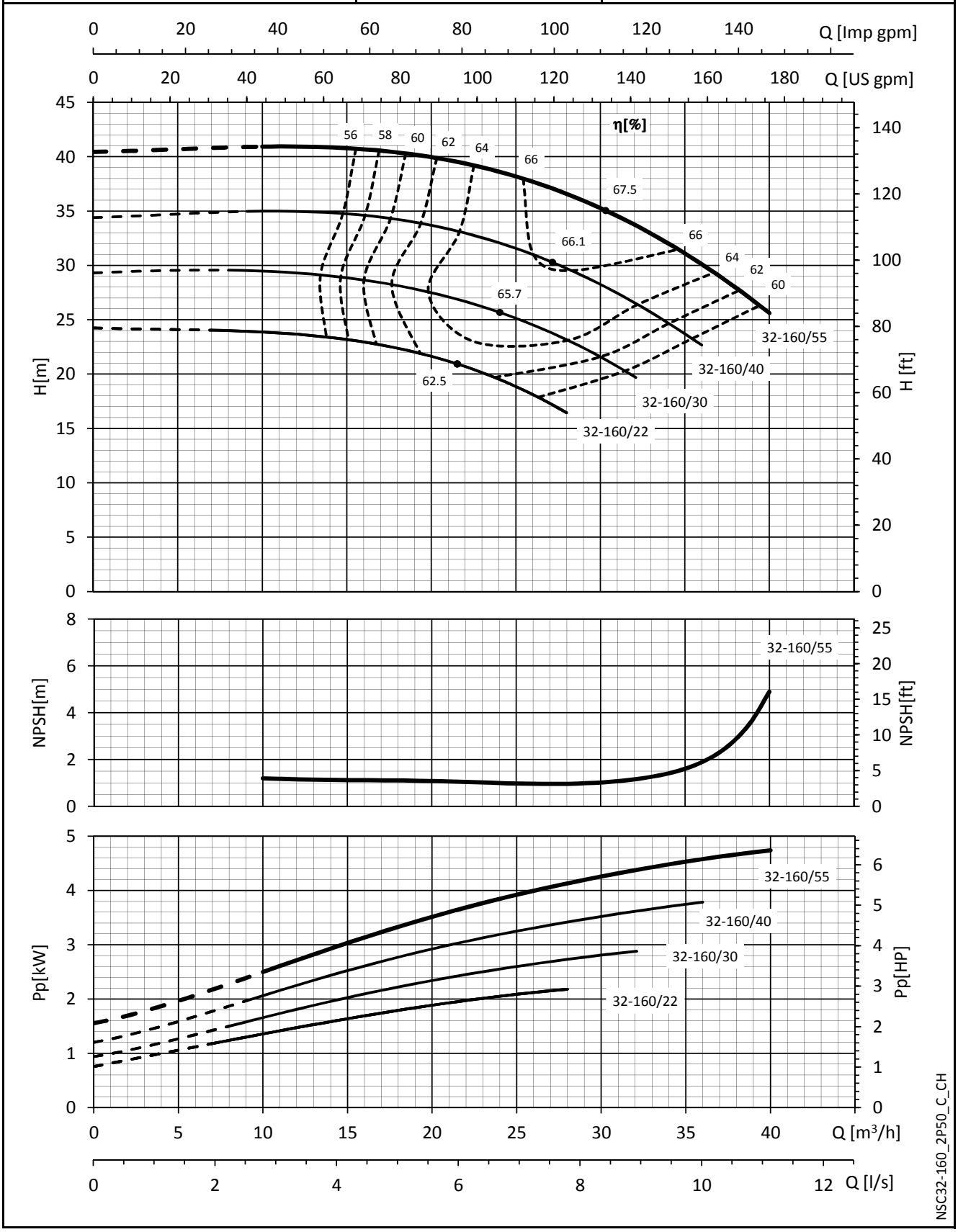

The NPSH values are laboratory values; for practical use we suggest increasing these values by 0,5 m.
These performances are valid for liquids with density ρ = 1,0 Kg/dm³ and kinematic viscosity ν = 1 mm²/sec.

LOWARA
a xylem brand

e-NSC SERIES
OPERATING CHARACTERISTICS AT 50 Hz, 2 POLES

NSC 32-200	~ 2900 [rpm]	ISO 9906:2012 - Grade 3B

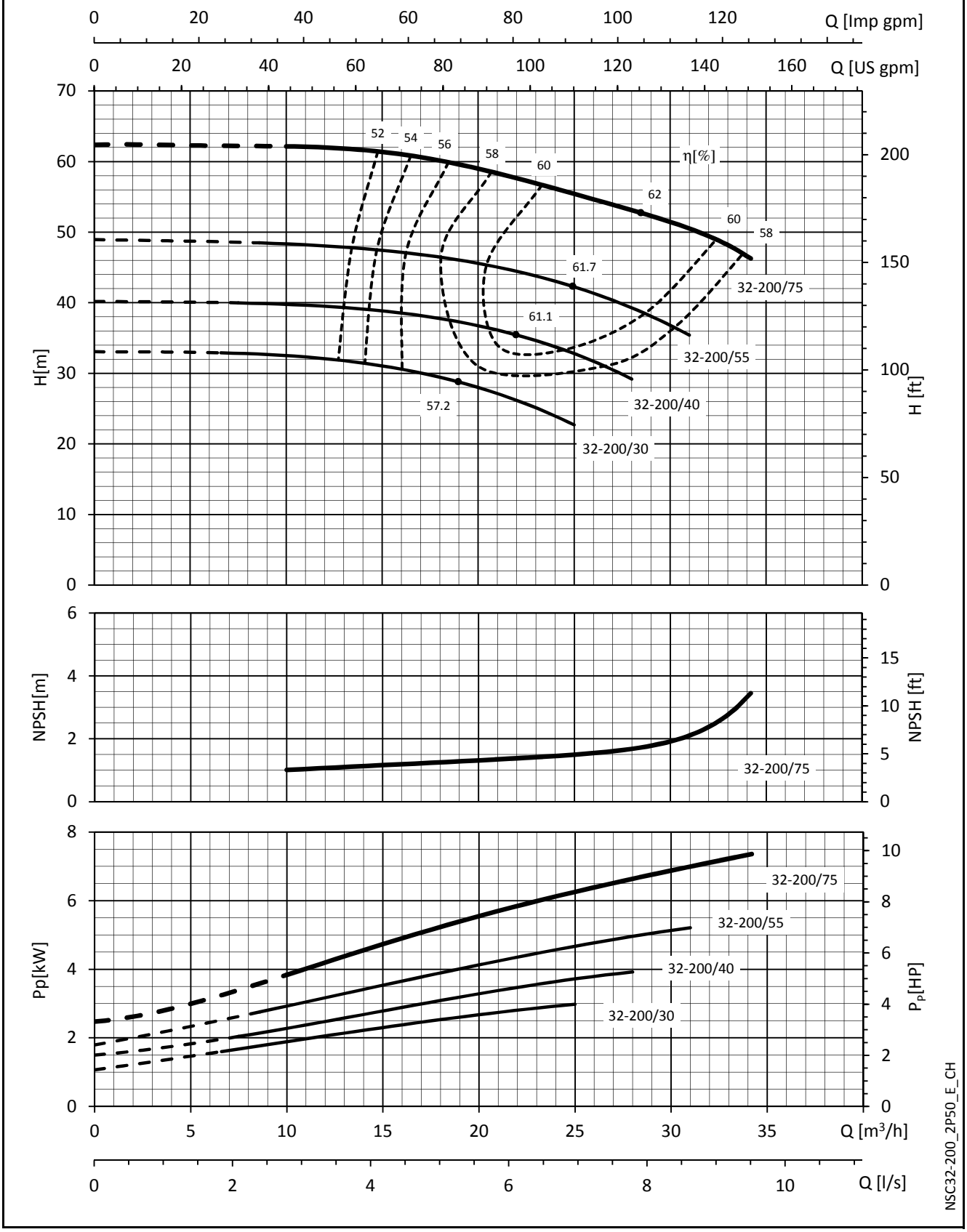

The NPSH values are laboratory values; for practical use we suggest increasing these values by 0,5 m.
These performances are valid for liquids with density ρ = 1,0 Kg/dm³ and kinematic viscosity ν = 1 mm²/sec.

LOWARA
a xylem brand

e-NSC SERIES
OPERATING CHARACTERISTICS AT 50 Hz, 2 POLES

NSC2 32-250	~ 2900 [rpm]	ISO 9906:2012 - Grade 3B

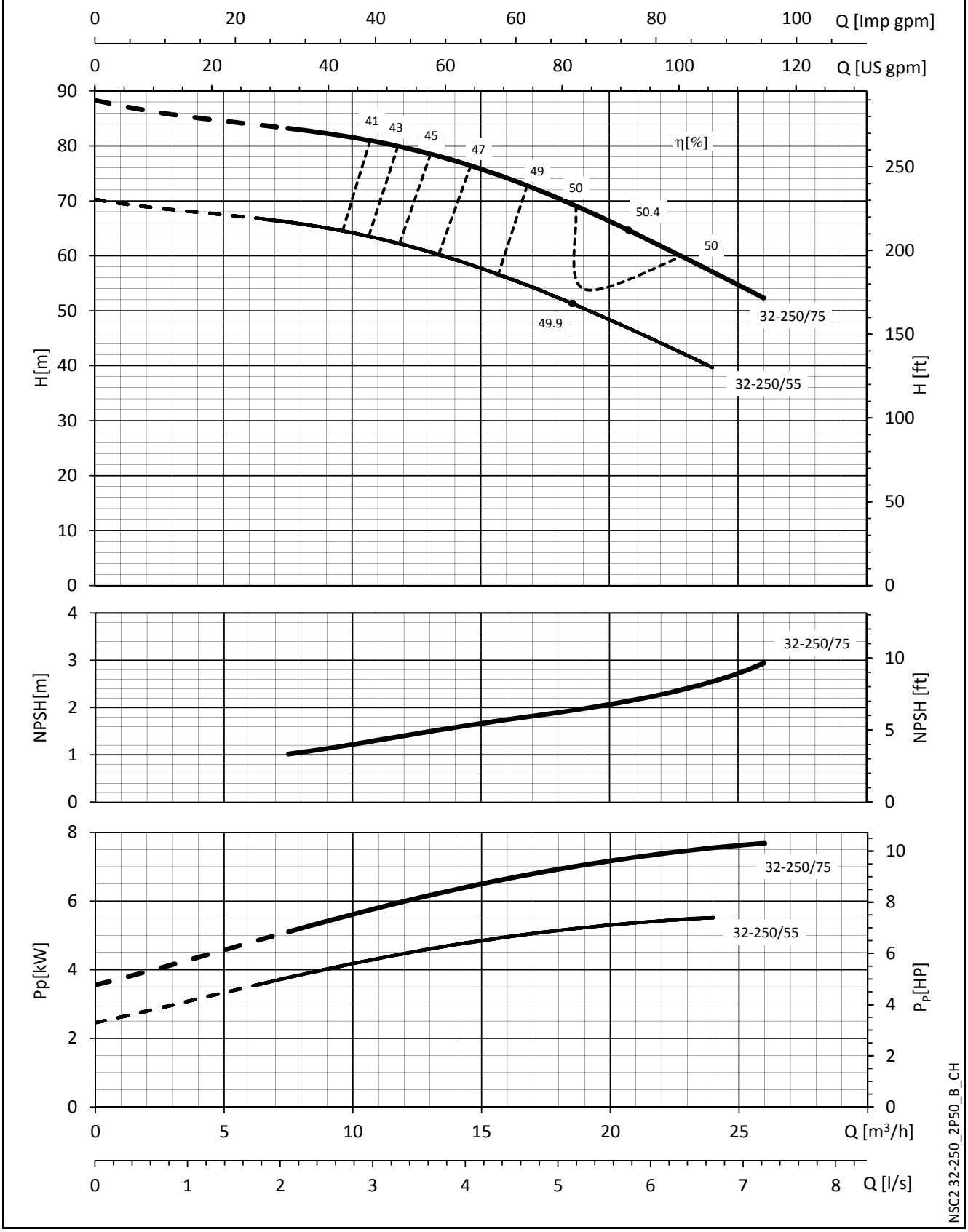

The NPSH values are laboratory values; for practical use we suggest increasing these values by 0,5 m.
These performances are valid for liquids with density ρ = 1,0 Kg/dm³ and kinematic viscosity ν = 1 mm²/sec.

LOWARA
a xylem brand

e-NSC SERIES
OPERATING CHARACTERISTICS AT 50 Hz, 2 POLES

NSC 32-250	~ 2900 [rpm]	ISO 9906:2012 - Grade 3B

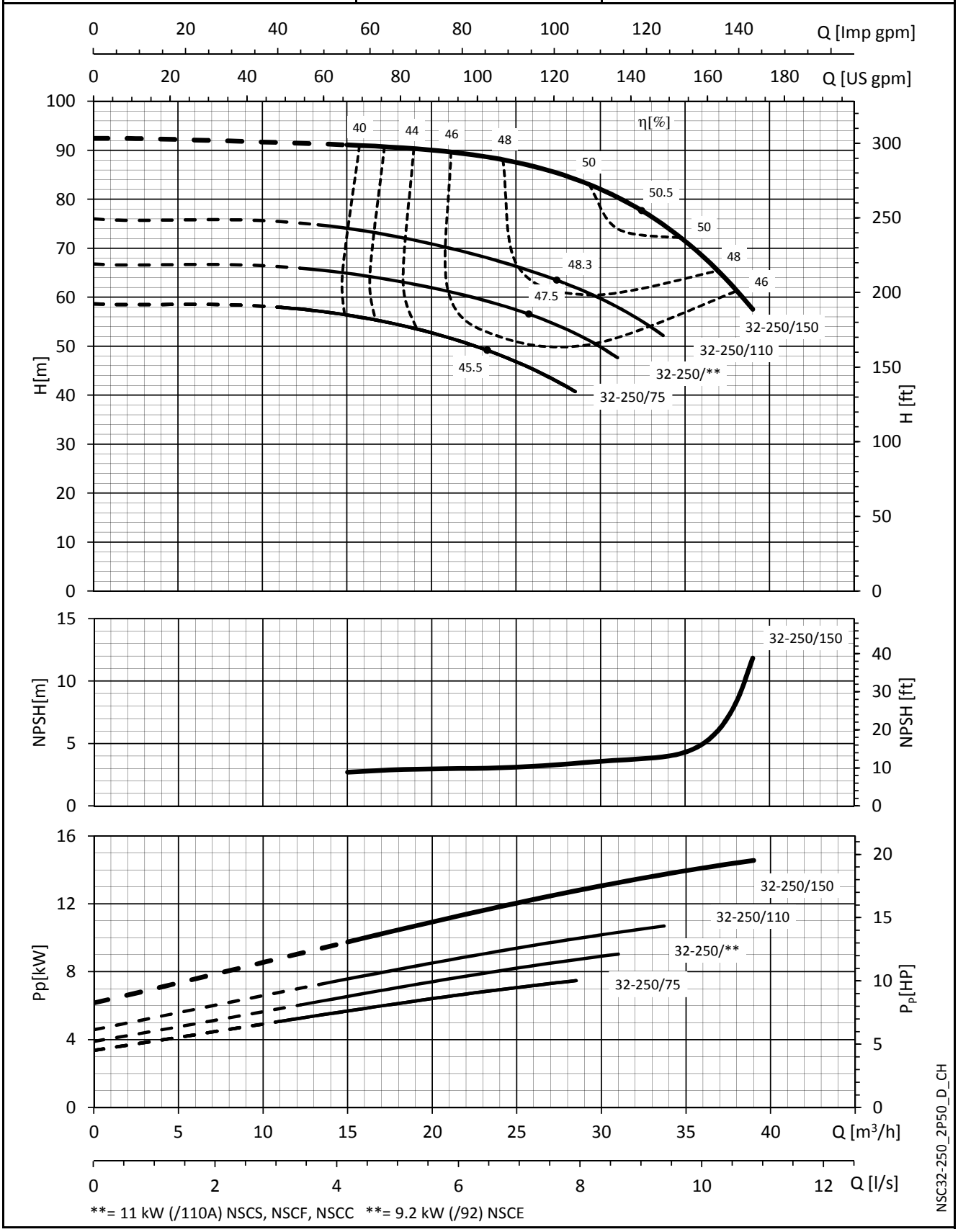

**= 11 kW (/110A) NSCS, NSCF, NSCC **= 9.2 kW (/92) NSCE

The NPSH values are laboratory values; for practical use we suggest increasing these values by 0,5 m.
These performances are valid for liquids with density ρ = 1,0 Kg/dm³ and kinematic viscosity ν = 1 mm²/sec.

LOWARA
a xylem brand

e-NSC SERIES
OPERATING CHARACTERISTICS AT 50 Hz, 2 POLES

NSC 40-125	~ 2900 [rpm]	ISO 9906:2012 - Grade 3B

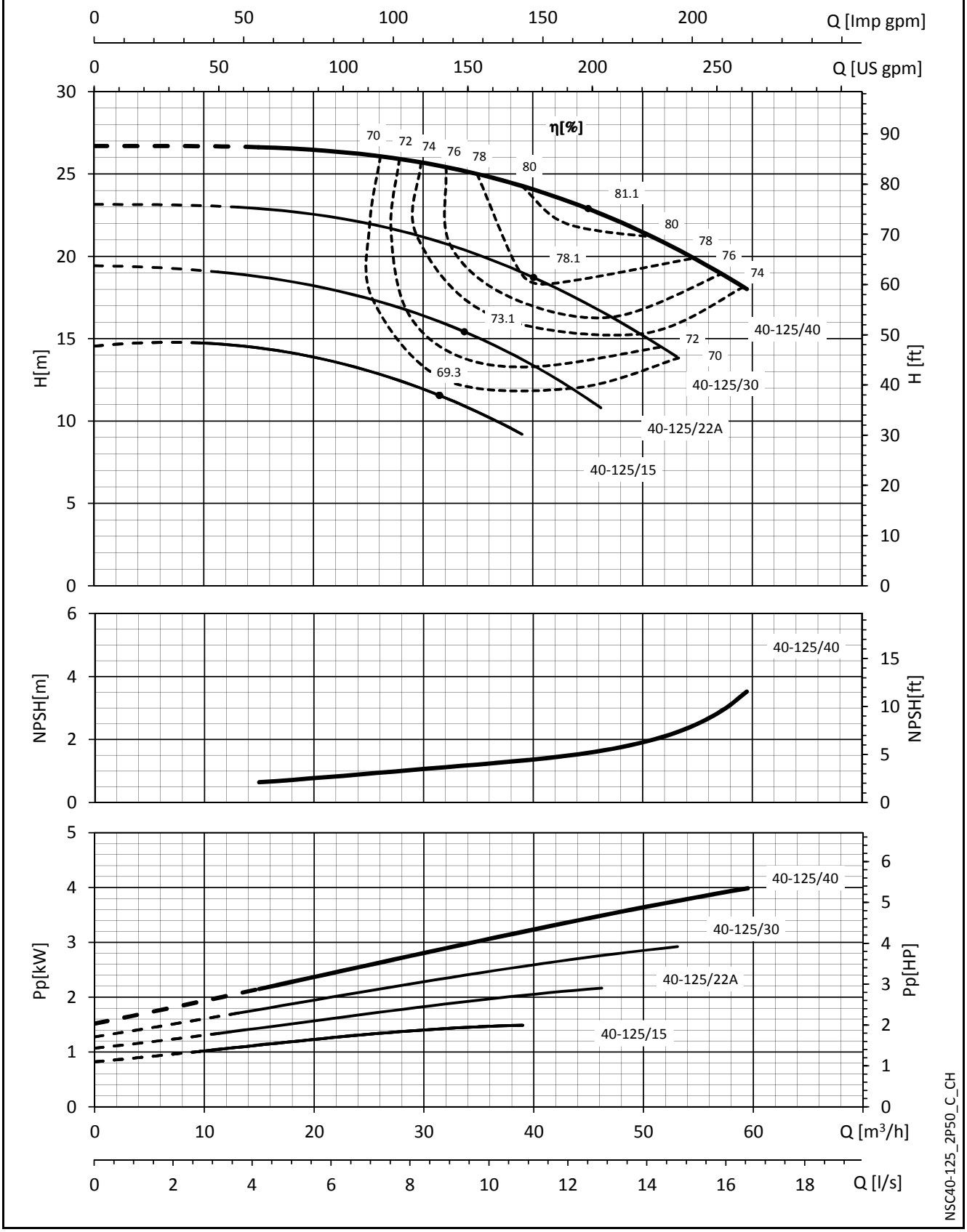

The NPSH values are laboratory values; for practical use we suggest increasing these values by 0,5 m.
These performances are valid for liquids with density ρ = 1,0 Kg/dm³ and kinematic viscosity ν = 1 mm²/sec.

LOWARA
a xylem brand

e-NSC SERIES
OPERATING CHARACTERISTICS AT 50 Hz, 2 POLES

NSC 40-160	~ 2900 [rpm]	ISO 9906:2012 - Grade 3B

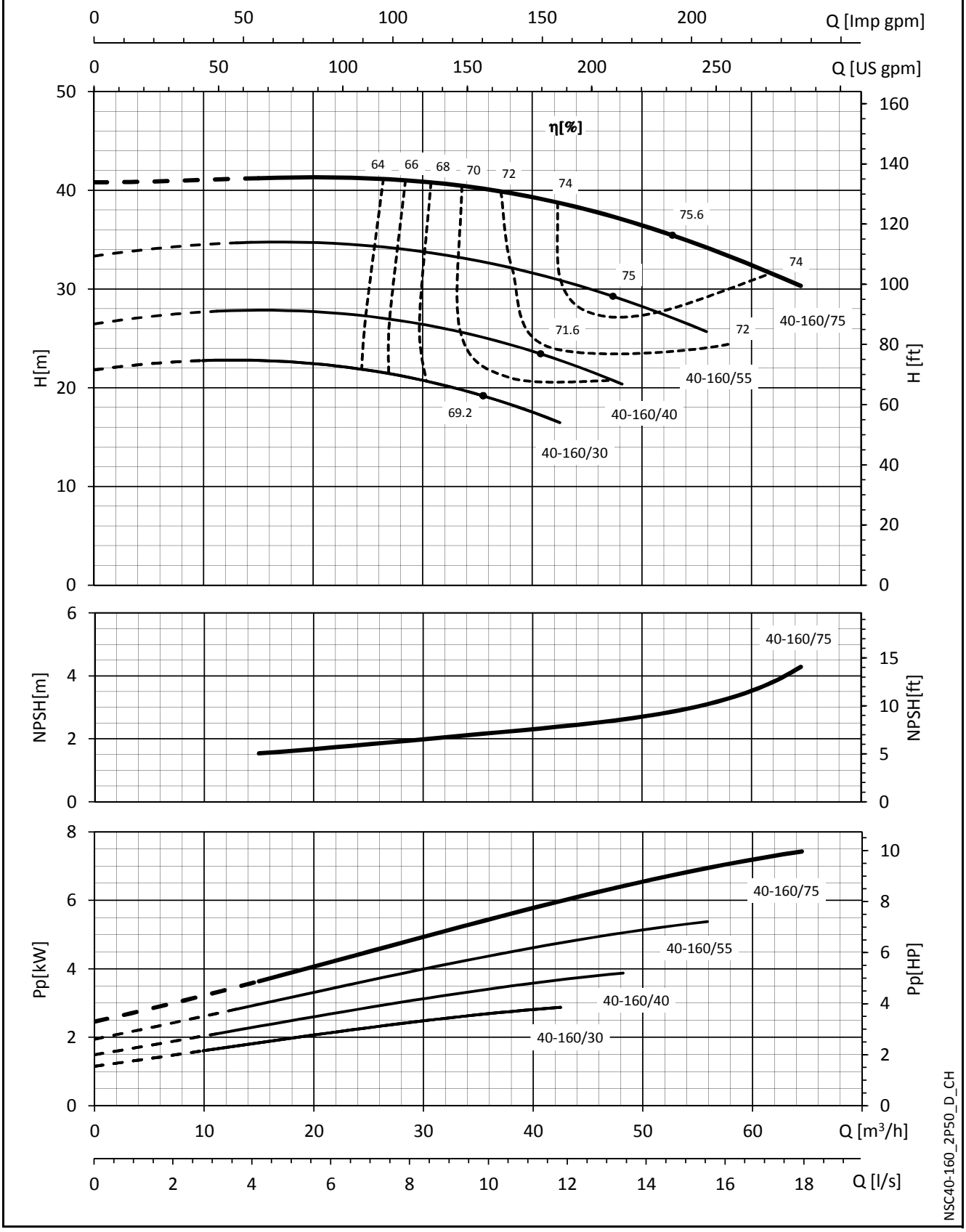

The NPSH values are laboratory values; for practical use we suggest increasing these values by 0,5 m.
These performances are valid for liquids with density ρ = 1,0 Kg/dm³ and kinematic viscosity ν = 1 mm²/sec.

e-NSC SERIES
OPERATING CHARACTERISTICS AT 50 Hz, 2 POLES

NSC 40-200	~ 2900 [rpm]	ISO 9906:2012 - Grade 3B

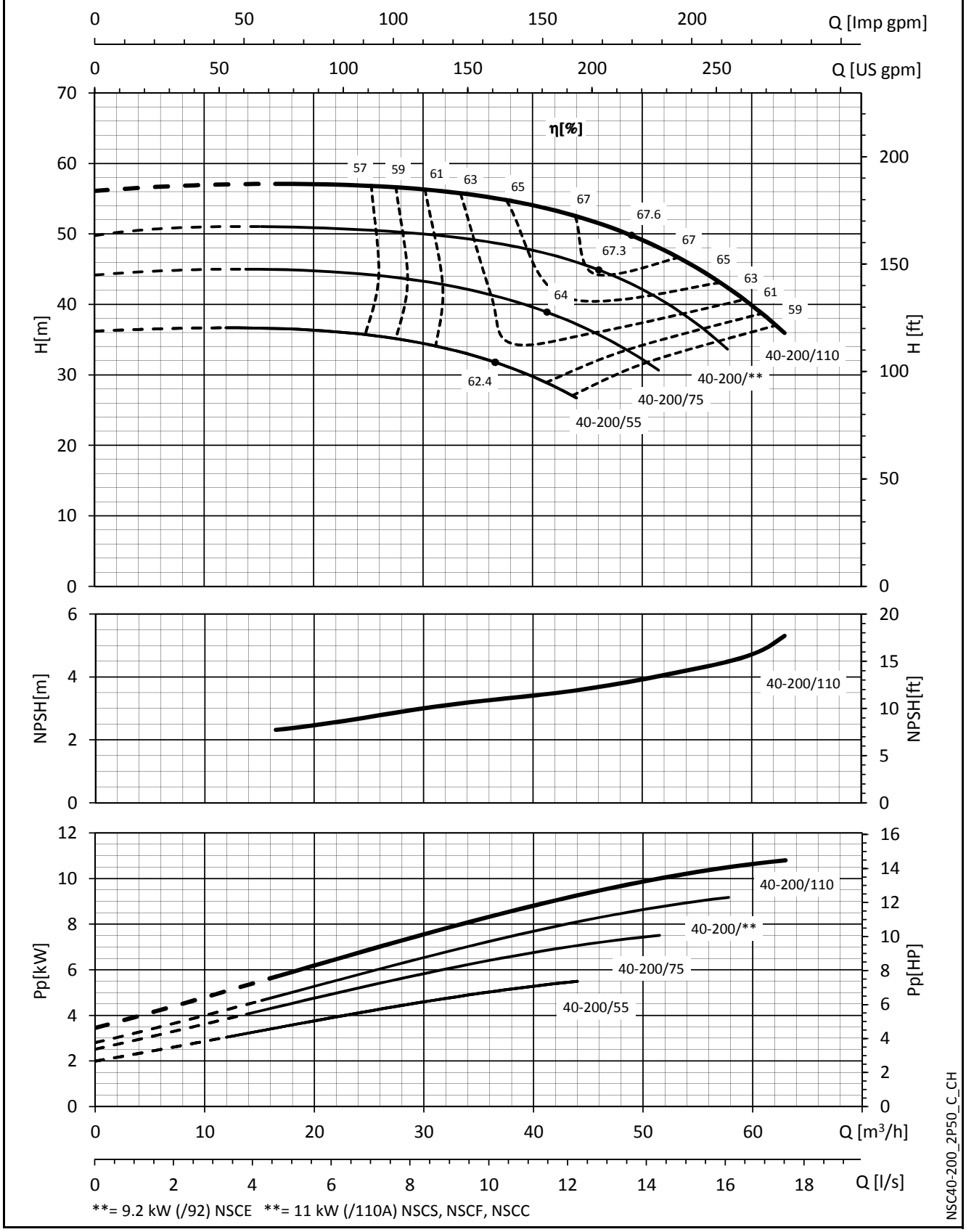

The NPSH values are laboratory values; for practical use we suggest increasing these values by 0,5 m.
These performances are valid for liquids with density ρ = 1,0 Kg/dm³ and kinematic viscosity ν = 1 mm²/sec.

e-NSC SERIES
OPERATING CHARACTERISTICS AT 50 Hz, 2 POLES

NSC 40-250	~ 2900 [rpm]	ISO 9906:2012 - Grade 3B

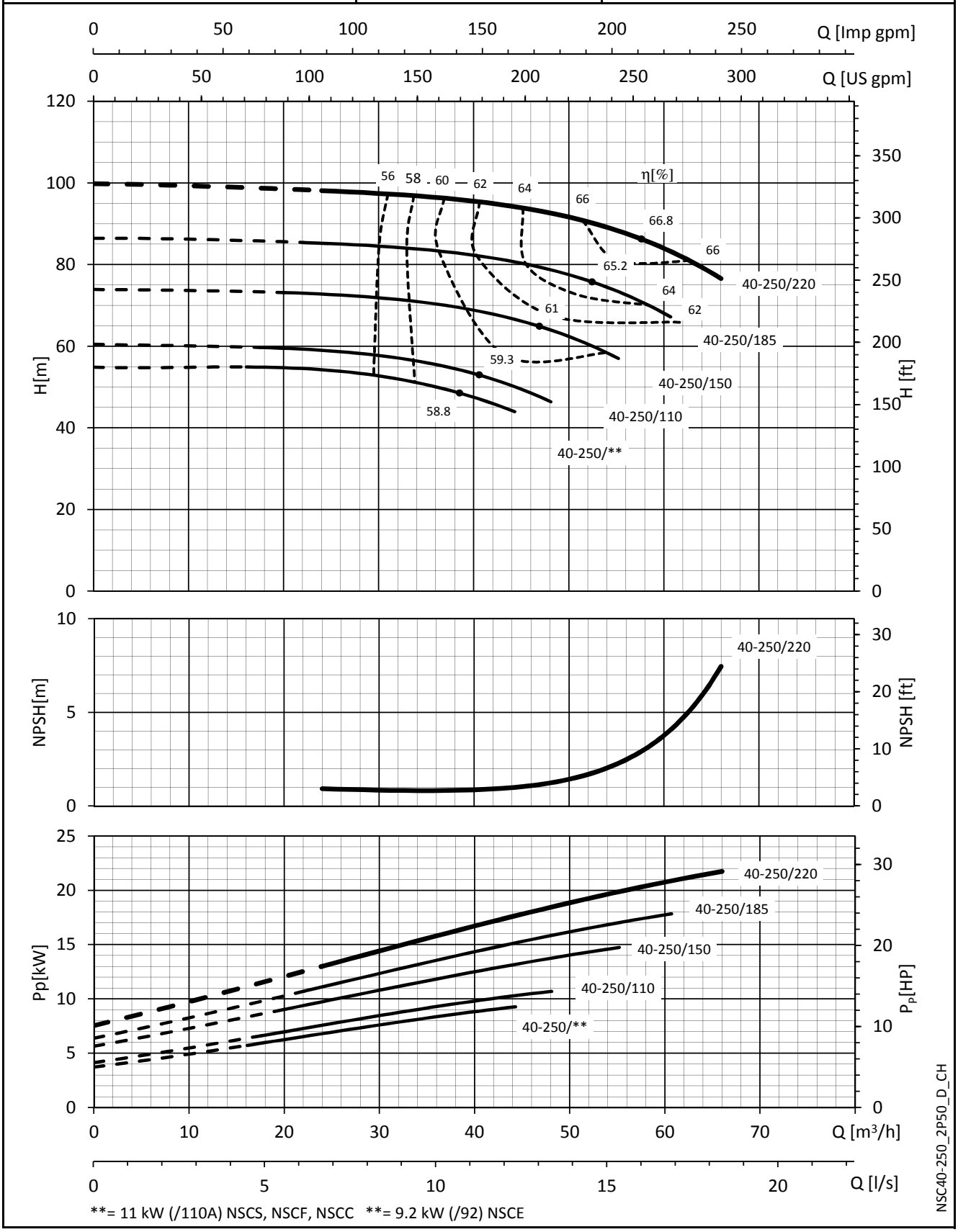

The NPSH values are laboratory values; for practical use we suggest increasing these values by 0,5 m.
These performances are valid for liquids with density ρ = 1,0 Kg/dm³ and kinematic viscosity ν = 1 mm²/sec.

LOWARA
a xylem brand

e-NSC SERIES
OPERATING CHARACTERISTICS AT 50 Hz, 2 POLES

NSC 50-125	~ 2900 [rpm]	ISO 9906:2012 - Grade 3B

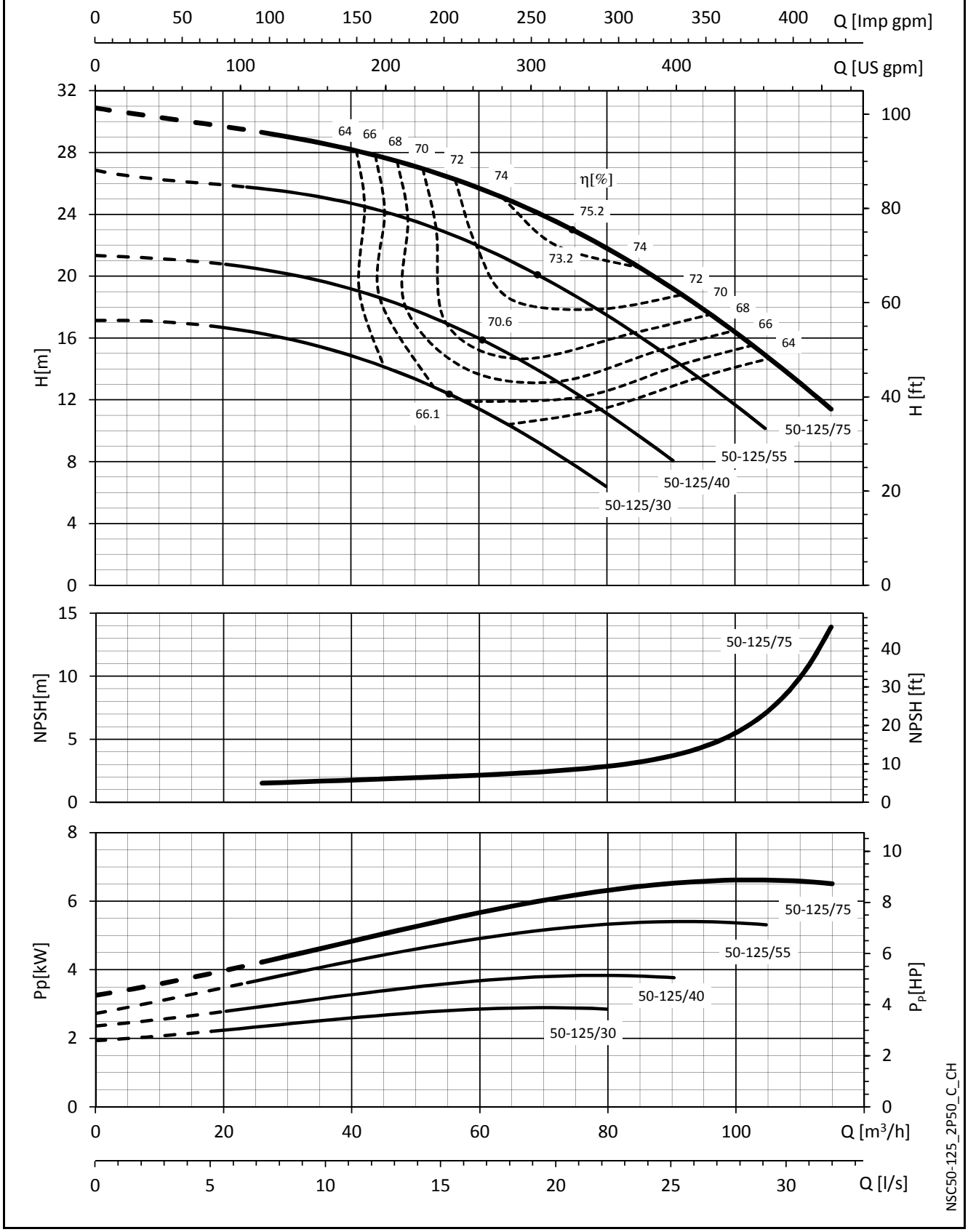

The NPSH values are laboratory values; for practical use we suggest increasing these values by 0,5 m.
These performances are valid for liquids with density ρ = 1,0 Kg/dm³ and kinematic viscosity ν = 1 mm²/sec.

LOWARA
a xylem brand

e-NSC SERIES
OPERATING CHARACTERISTICS AT 50 Hz, 2 POLES

NSC 50-160	~ 2900 [rpm]	ISO 9906:2012 - Grade 3B

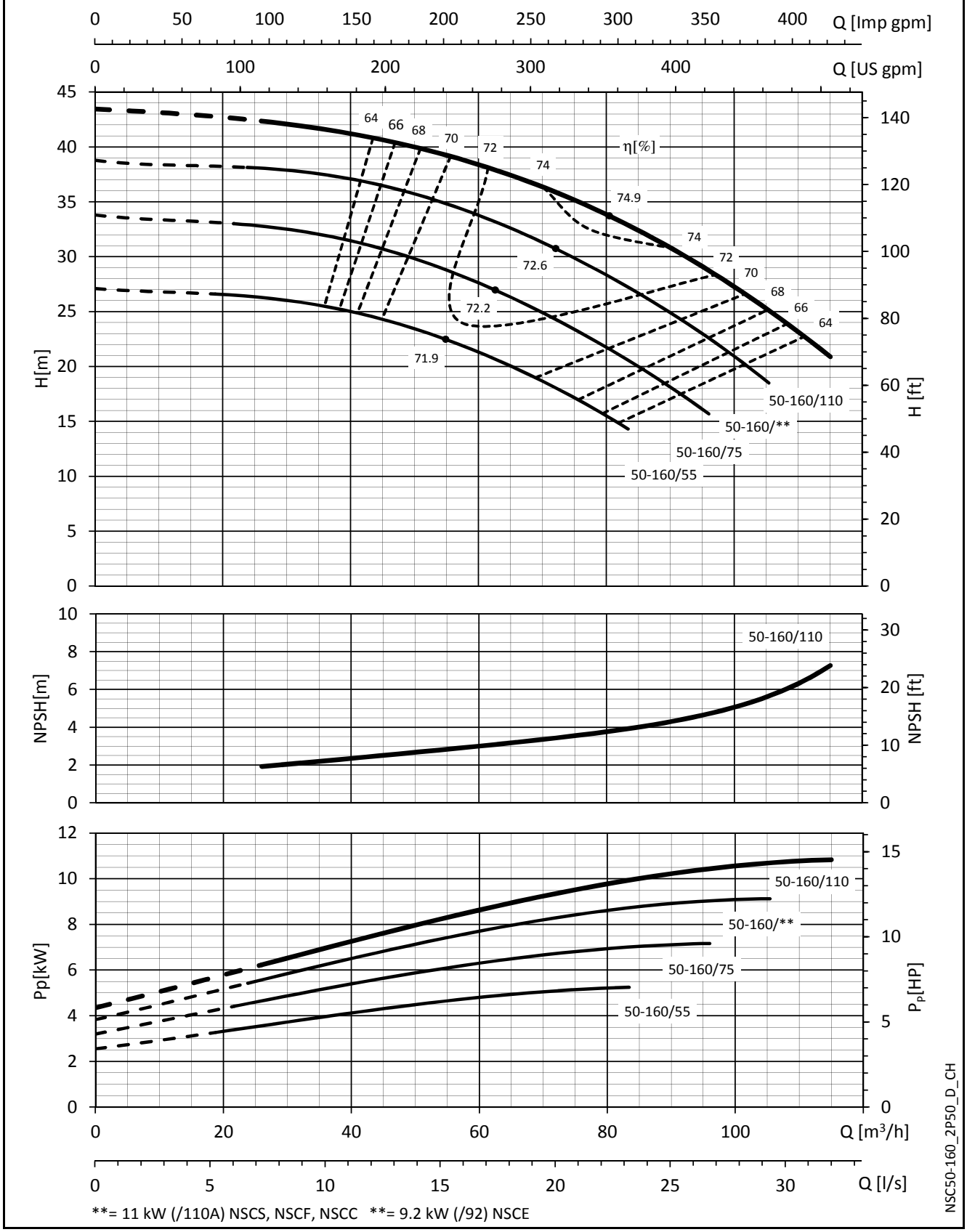

**= 11 kW (/110A) NSCS, NSCF, NSCC **= 9.2 kW (/92) NSCE

The NPSH values are laboratory values; for practical use we suggest increasing these values by 0,5 m.
These performances are valid for liquids with density ρ = 1,0 Kg/dm³ and kinematic viscosity ν = 1 mm²/sec.

LOWARA
a xylem brand

e-NSC SERIES
OPERATING CHARACTERISTICS AT 50 Hz, 2 POLES

NSC 50-200	~ 2900 [rpm]	ISO 9906:2012 - Grade 3B

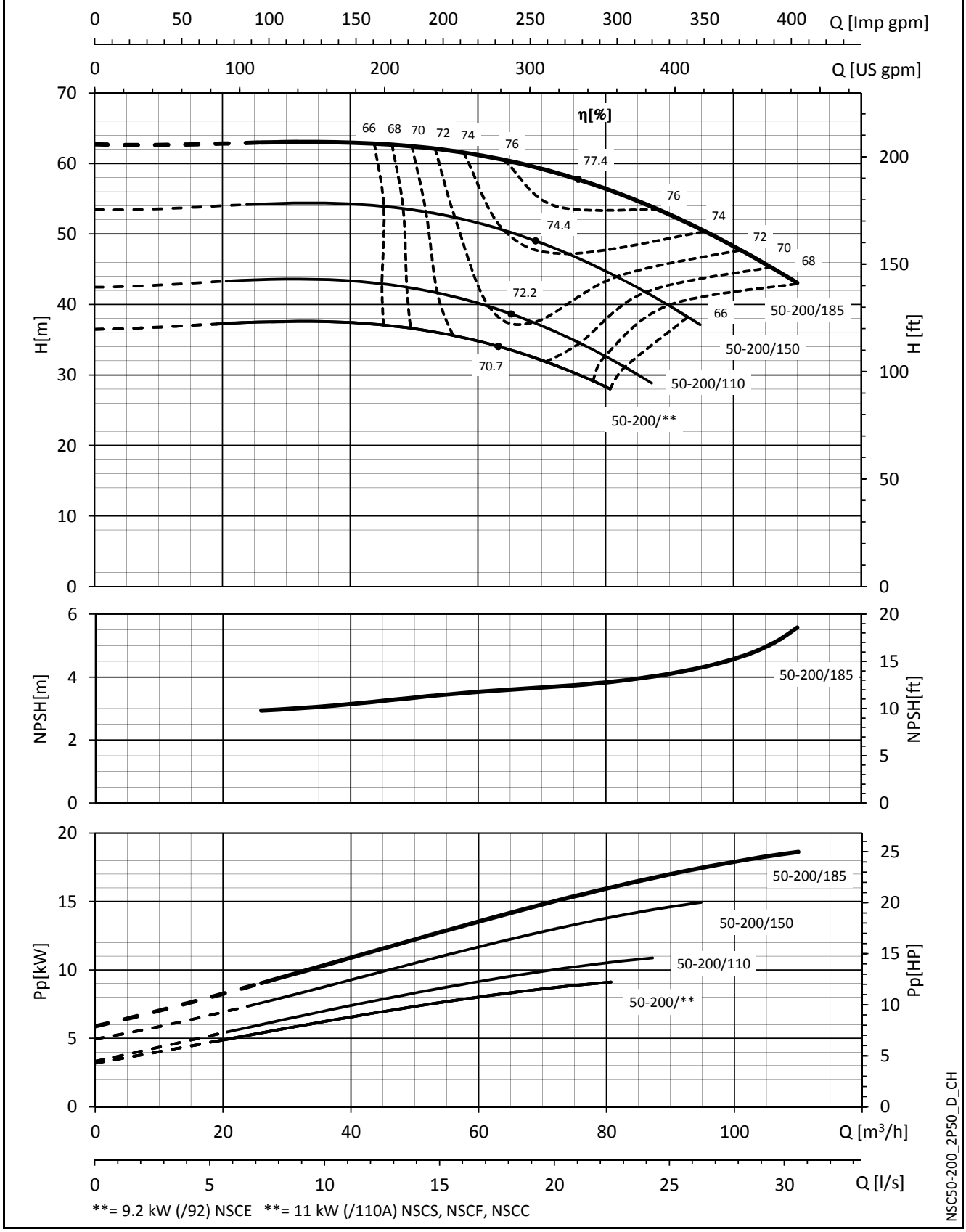

**= 9.2 kW (/92) NSCE **= 11 kW (/110A) NSCS, NSCF, NSCC

The NPSH values are laboratory values; for practical use we suggest increasing these values by 0,5 m.
These performances are valid for liquids with density ρ = 1,0 Kg/dm³ and kinematic viscosity ν = 1 mm²/sec.

LOWARA
a xylem brand

e-NSC SERIES
OPERATING CHARACTERISTICS AT 50 Hz, 2 POLES

NSC 50-250	~ 2900 [rpm]	ISO 9906:2012 - Grade 3B

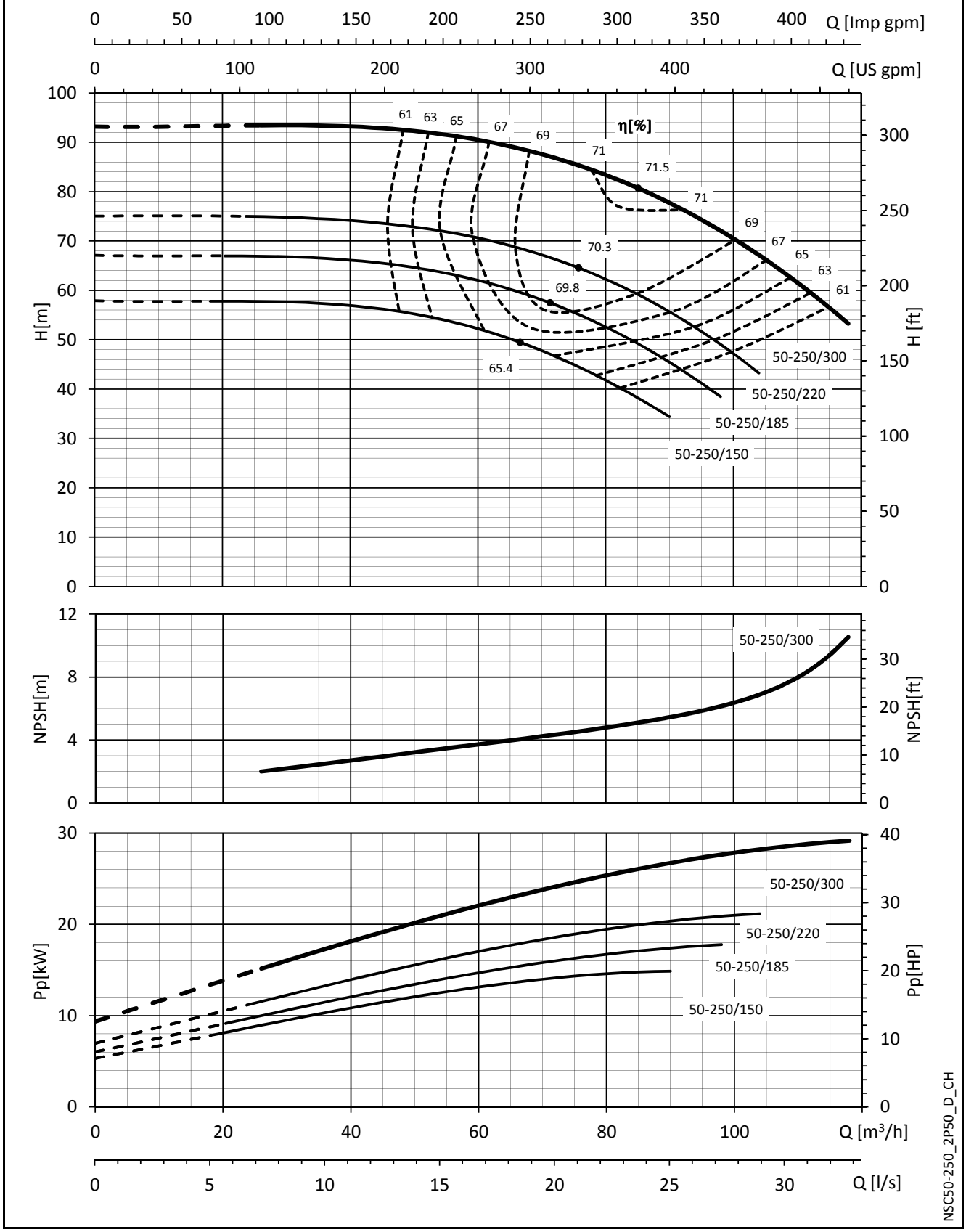

The NPSH values are laboratory values; for practical use we suggest increasing these values by 0,5 m.
These performances are valid for liquids with density ρ = 1,0 Kg/dm³ and kinematic viscosity ν = 1 mm²/sec.

LOWARA
a xylem brand

e-NSC SERIES
OPERATING CHARACTERISTICS AT 50 Hz, 2 POLES

NSC 50-315	~ 2950 [rpm]	ISO 9906:2012 - Grade 3B

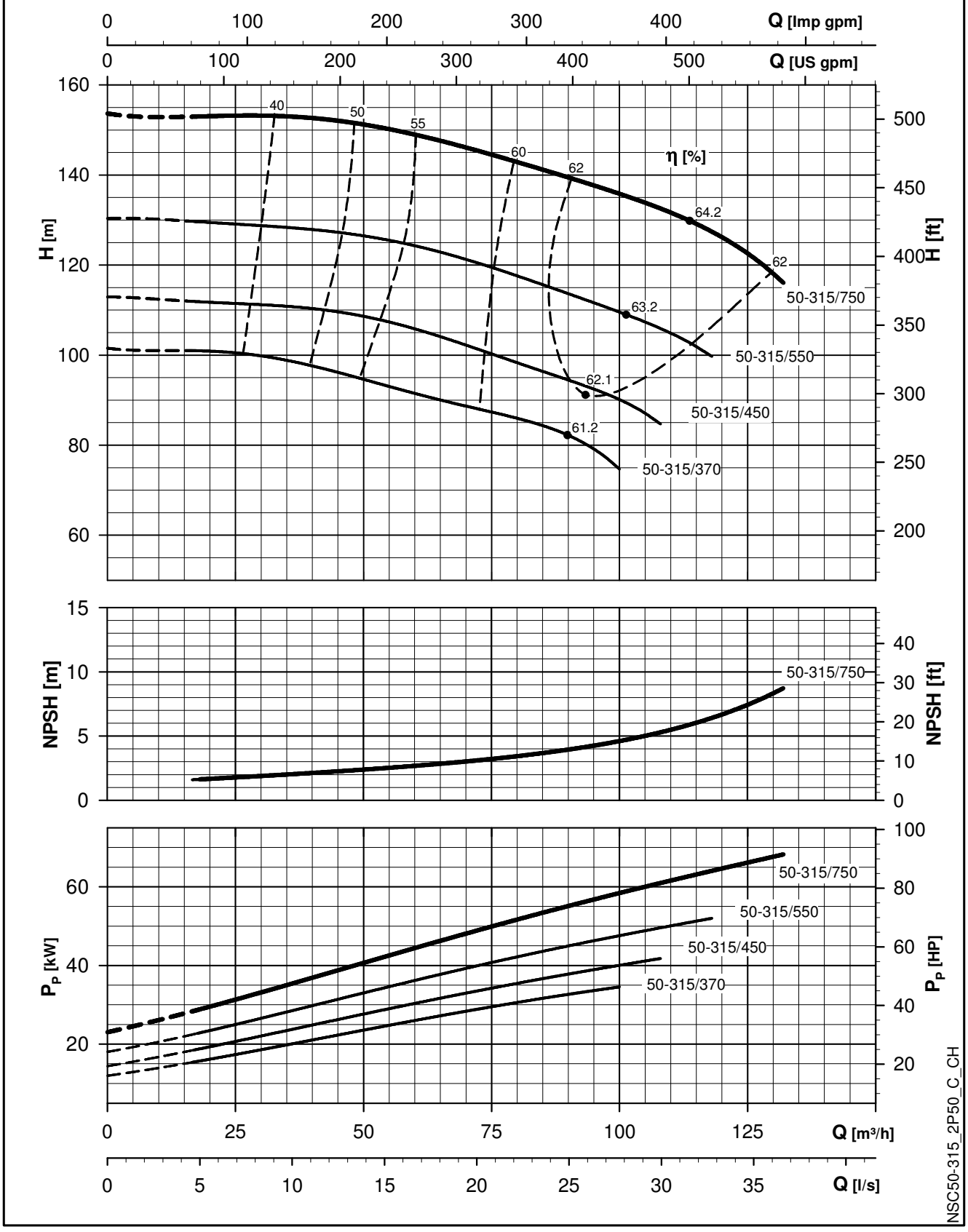

The NPSH values are laboratory values; for practical use we suggest increasing these values by 0,5 m.
These performances are valid for liquids with density $\rho = 1,0$ Kg/dm^3 and kinematic viscosity $\nu = 1$ mm^2/sec.

LOWARA
a xylem brand

e-NSC SERIES
OPERATING CHARACTERISTICS AT 50 Hz, 2 POLES

NSC 65-125	~ 2900 [rpm]	ISO 9906:2012 - Grade 3B

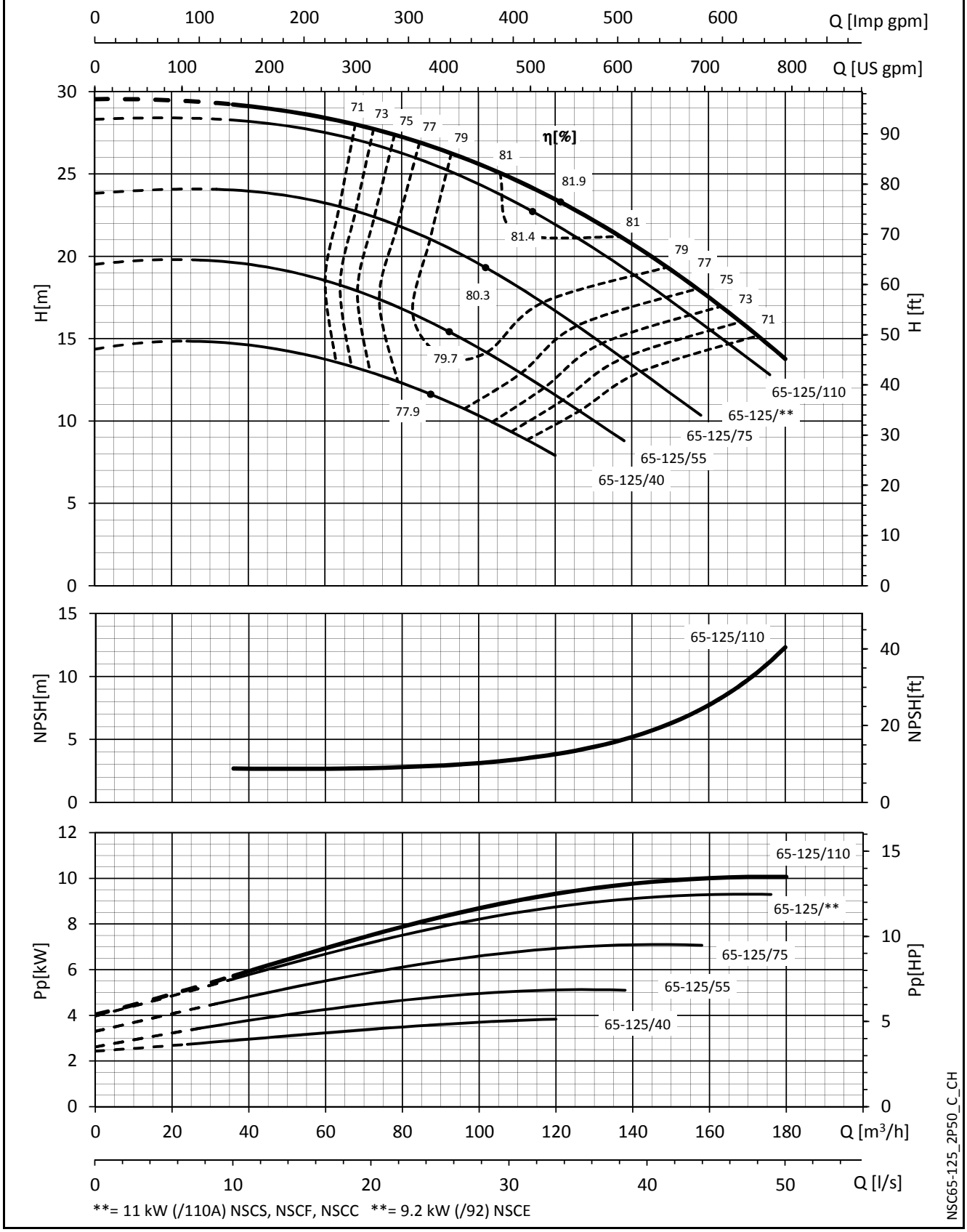

The NPSH values are laboratory values; for practical use we suggest increasing these values by 0,5 m.
These performances are valid for liquids with density ρ = 1,0 Kg/dm³ and kinematic viscosity ν = 1 mm²/sec.

LOWARA
a xylem brand

e-NSC SERIES
OPERATING CHARACTERISTICS AT 50 Hz, 2 POLES

NSC 65-160	~ 2900 [rpm]	ISO 9906:2012 - Grade 3B

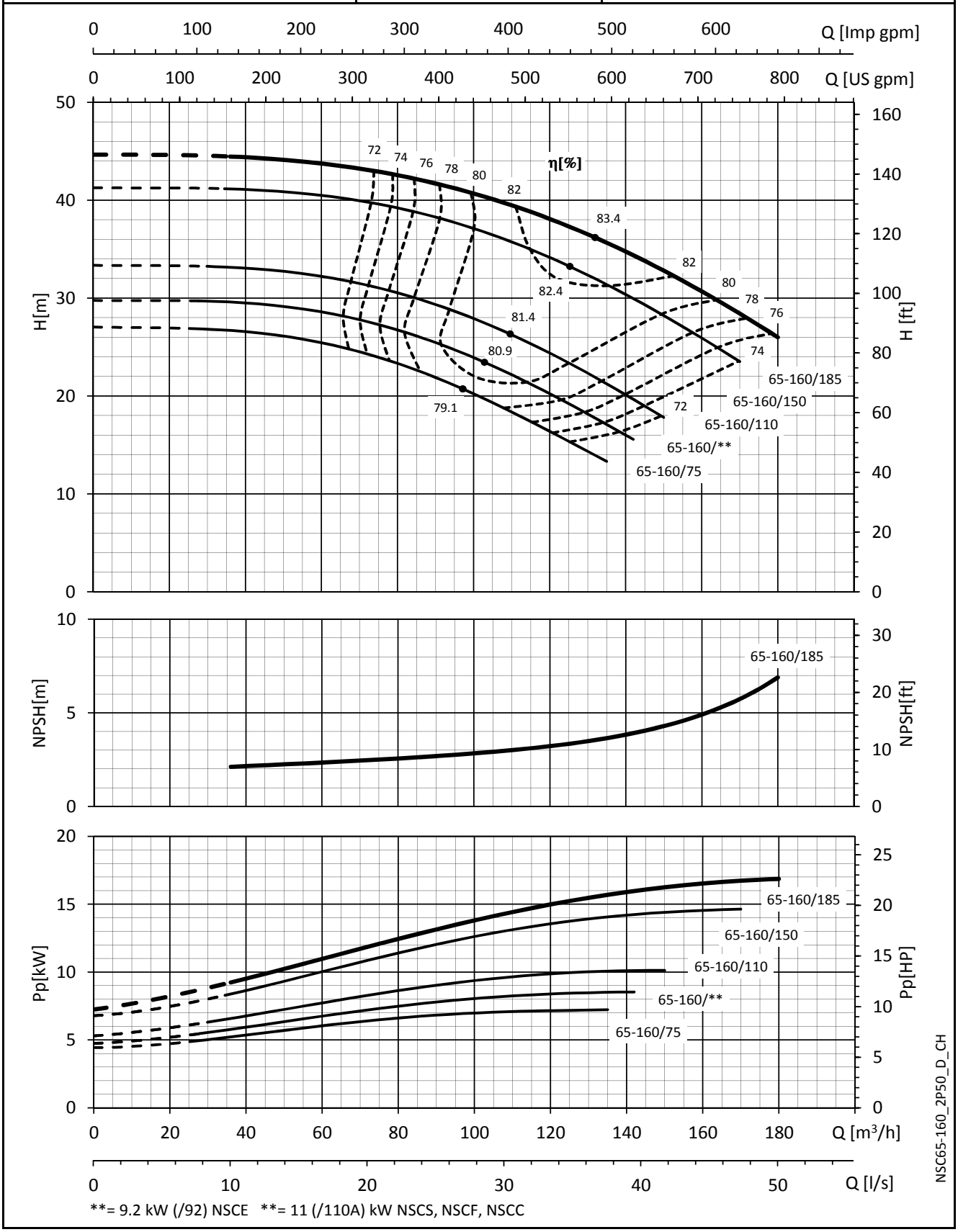

**= 9.2 kW (/92) NSCE **= 11 (/110A) kW NSCS, NSCF, NSCC

The NPSH values are laboratory values; for practical use we suggest increasing these values by 0,5 m.
These performances are valid for liquids with density ρ = 1,0 Kg/dm³ and kinematic viscosity ν = 1 mm²/sec.

LOWARA
a xylem brand

e-NSC SERIES
OPERATING CHARACTERISTICS AT 50 Hz, 2 POLES

NSC 65-200	~ 2900 [rpm]	ISO 9906:2012 - Grade 3B

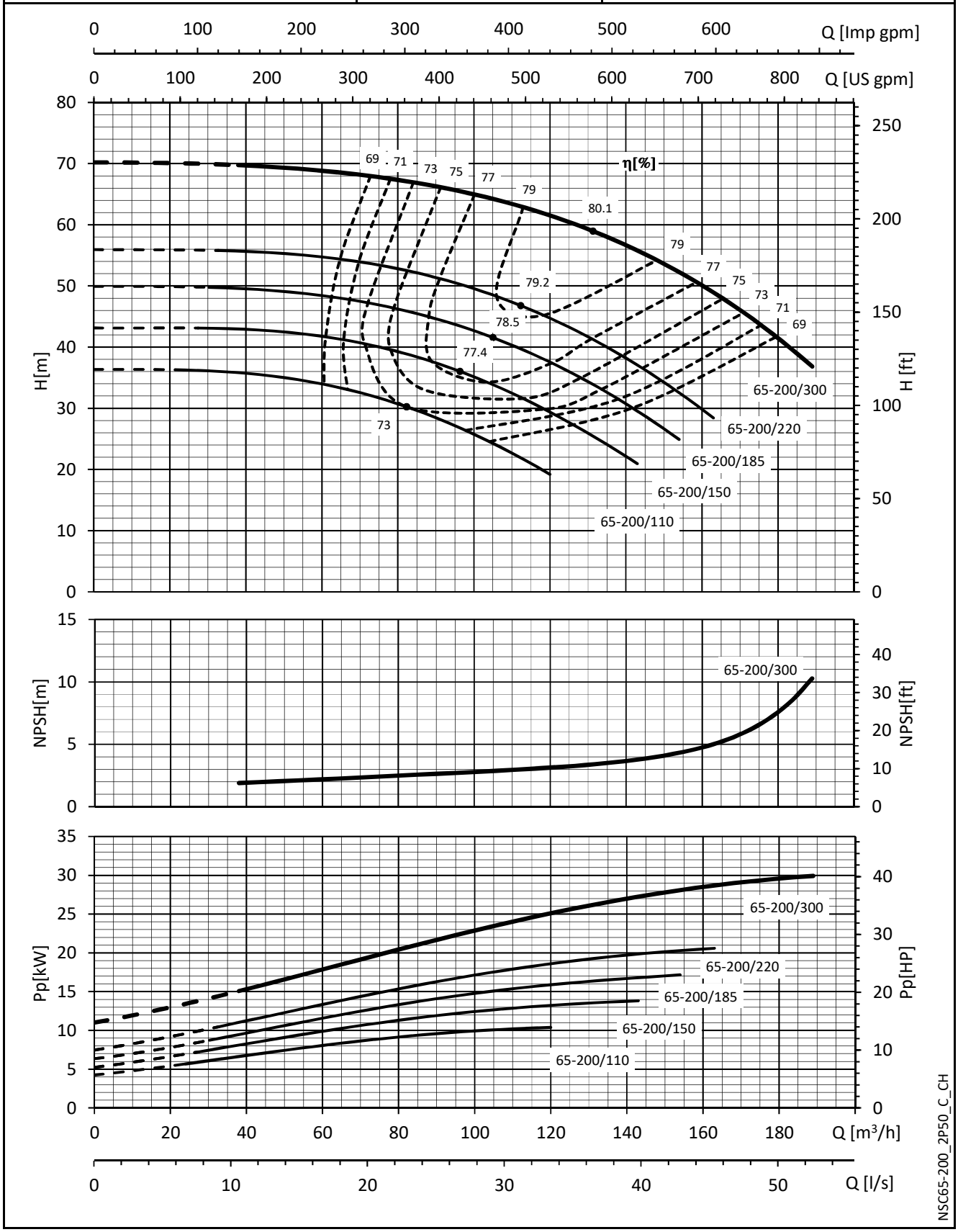

The NPSH values are laboratory values; for practical use we suggest increasing these values by 0,5 m.
These performances are valid for liquids with density ρ = 1,0 Kg/dm³ and kinematic viscosity ν = 1 mm²/sec.

LOWARA
a xylem brand

e-NSC SERIES
OPERATING CHARACTERISTICS AT 50 Hz, 2 POLES

NSC 65-250	~ 2900 [rpm]	ISO 9906:2012 - Grade 3B

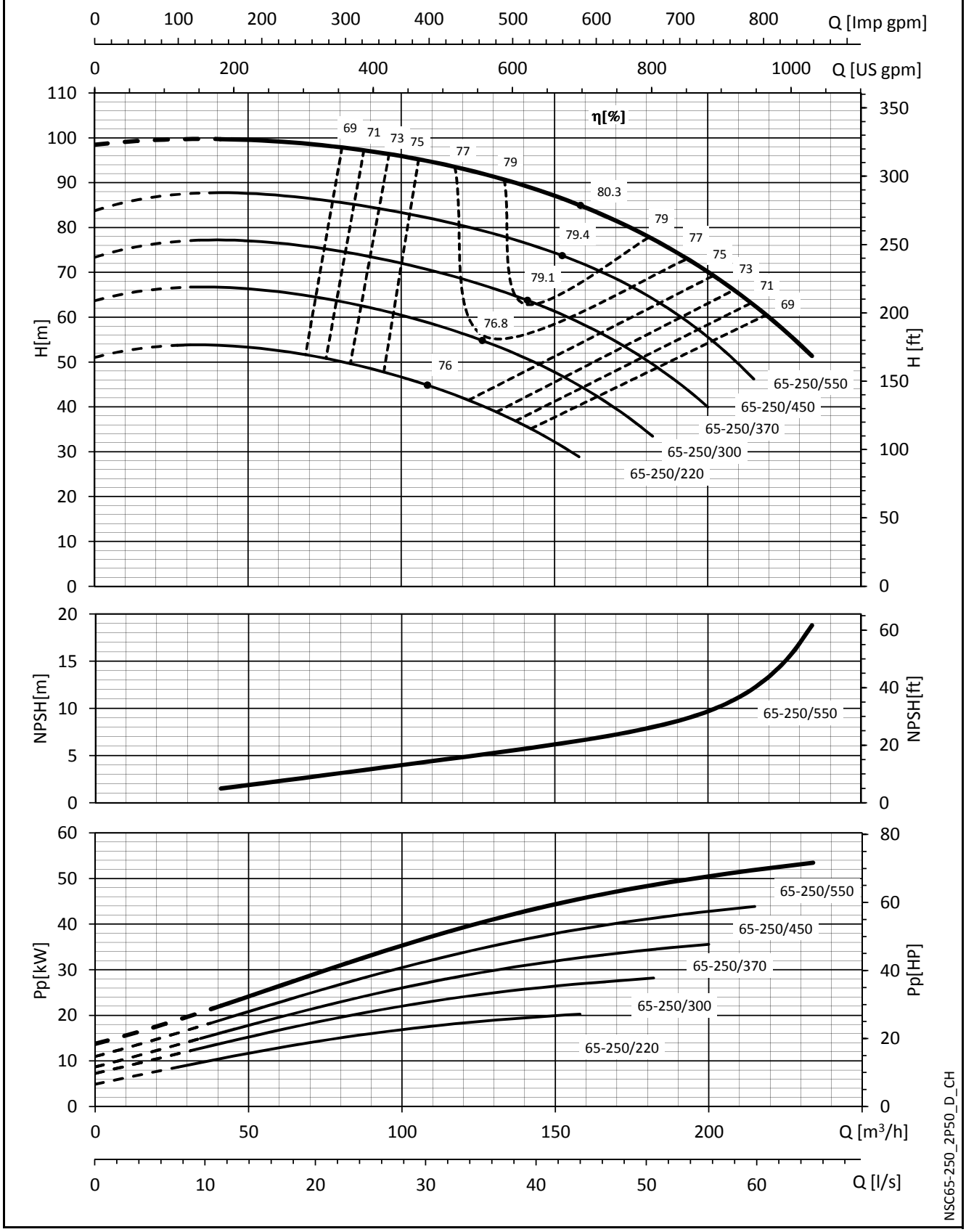

The NPSH values are laboratory values; for practical use we suggest increasing these values by 0,5 m.
These performances are valid for liquids with density ρ = 1,0 Kg/dm³ and kinematic viscosity ν = 1 mm²/sec.

e-NSC SERIES
OPERATING CHARACTERISTICS AT 50 Hz, 2 POLES

NSC 65-315	~ 2950 [rpm]	ISO 9906:2012 - Grade 3B

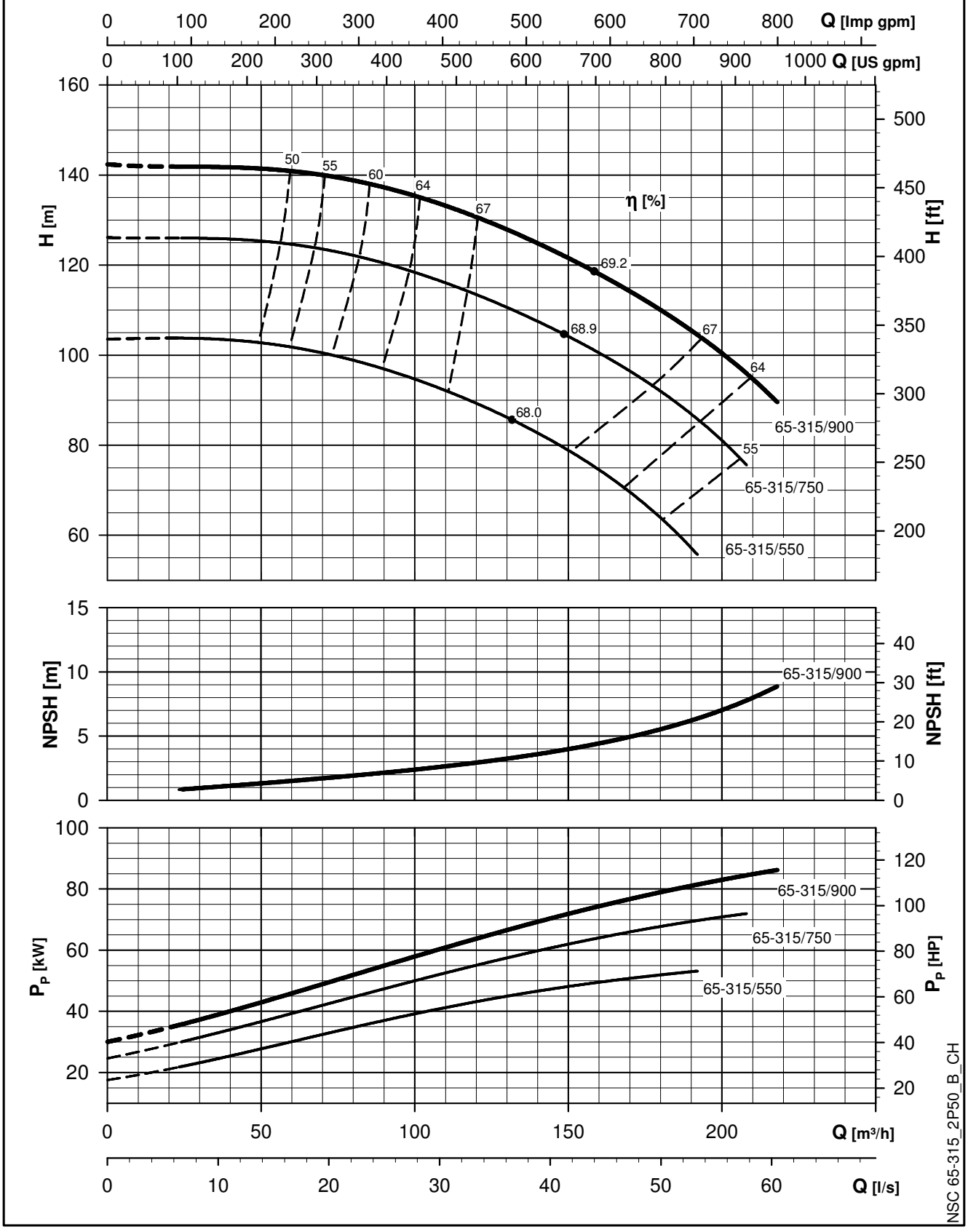

The NPSH values are laboratory values; for practical use we suggest increasing these values by 0,5 m.
These performances are valid for liquids with density ρ = 1,0 Kg/dm³ and kinematic viscosity ν = 1 mm²/sec.

LOWARA
a xylem brand

e-NSC SERIES
OPERATING CHARACTERISTICS AT 50 Hz, 2 POLES

NSC 80-160	~ 2900 [rpm]	ISO 9906:2012 - Grade 3B

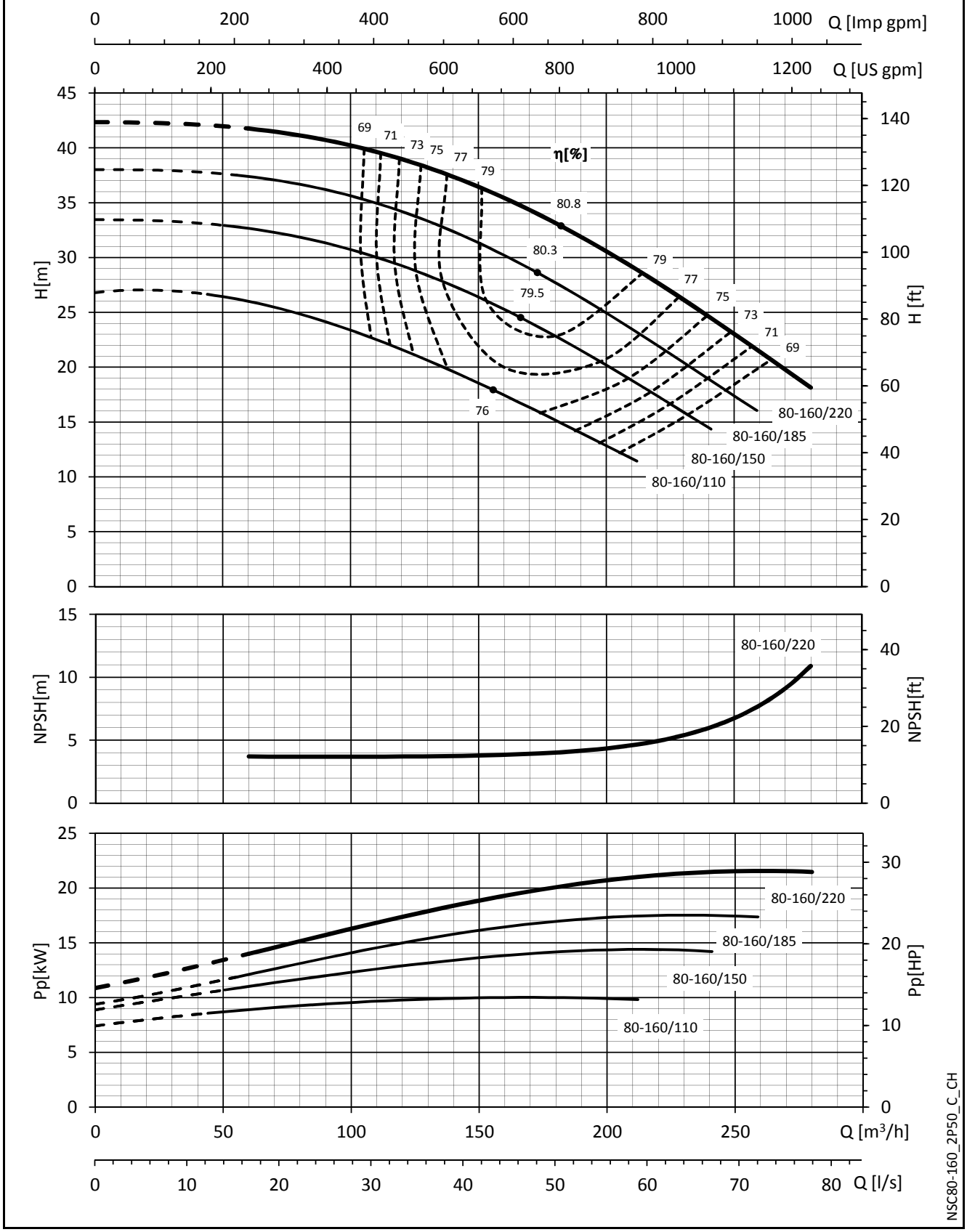

The NPSH values are laboratory values; for practical use we suggest increasing these values by 0,5 m.
These performances are valid for liquids with density ρ = 1,0 Kg/dm³ and kinematic viscosity ν = 1 mm²/sec.

LOWARA
a xylem brand

e-NSC SERIES
OPERATING CHARACTERISTICS AT 50 Hz, 2 POLES

NSC 80-200	~ 2900 [rpm]	ISO 9906:2012 - Grade 3B

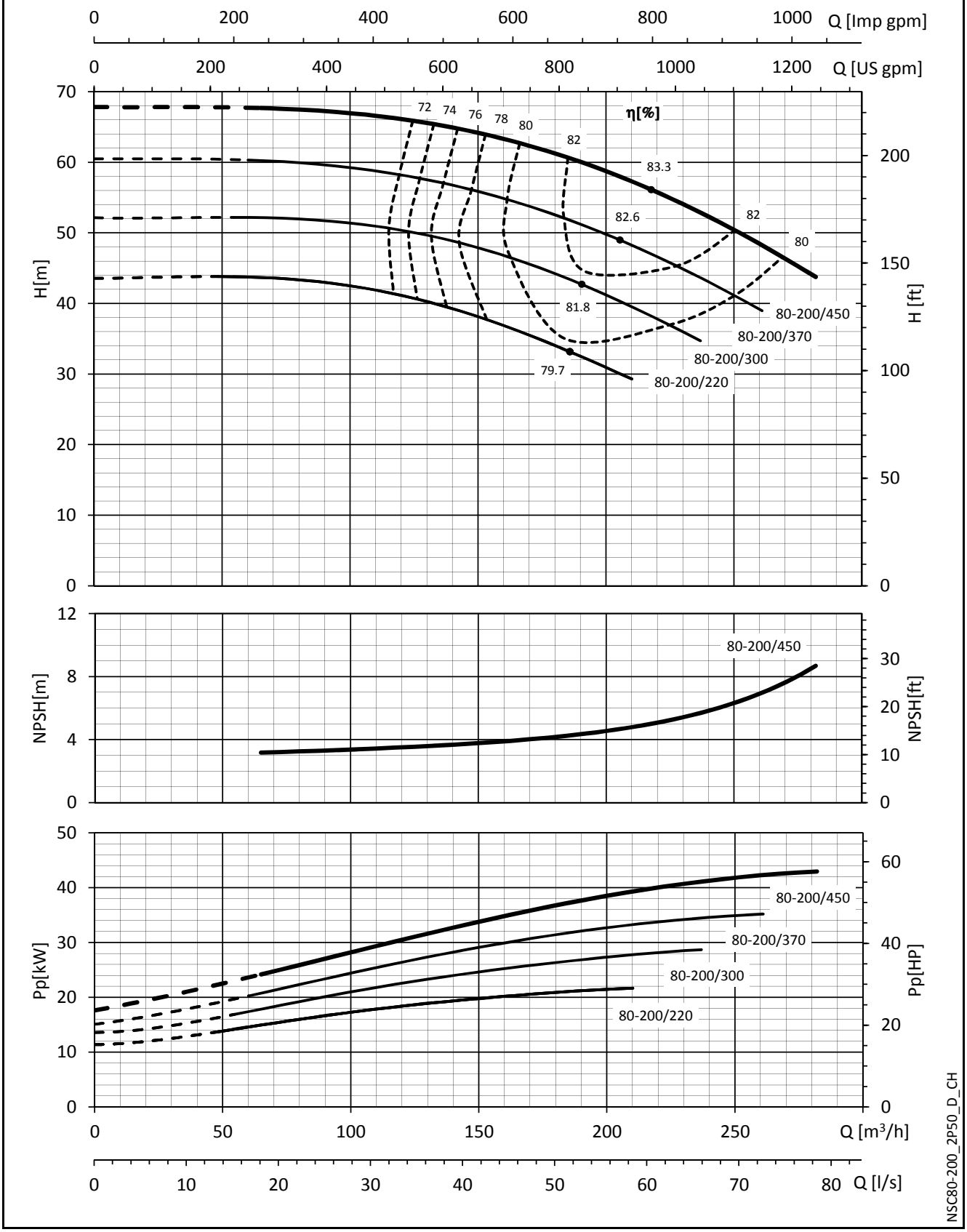

The NPSH values are laboratory values; for practical use we suggest increasing these values by 0,5 m.
These performances are valid for liquids with density ρ = 1,0 Kg/dm³ and kinematic viscosity ν = 1 mm²/sec.

e-NSC SERIES
OPERATING CHARACTERISTICS AT 50 Hz, 2 POLES

NSC 80-250	~ 2900 [rpm]	ISO 9906:2012 - Grade 3B

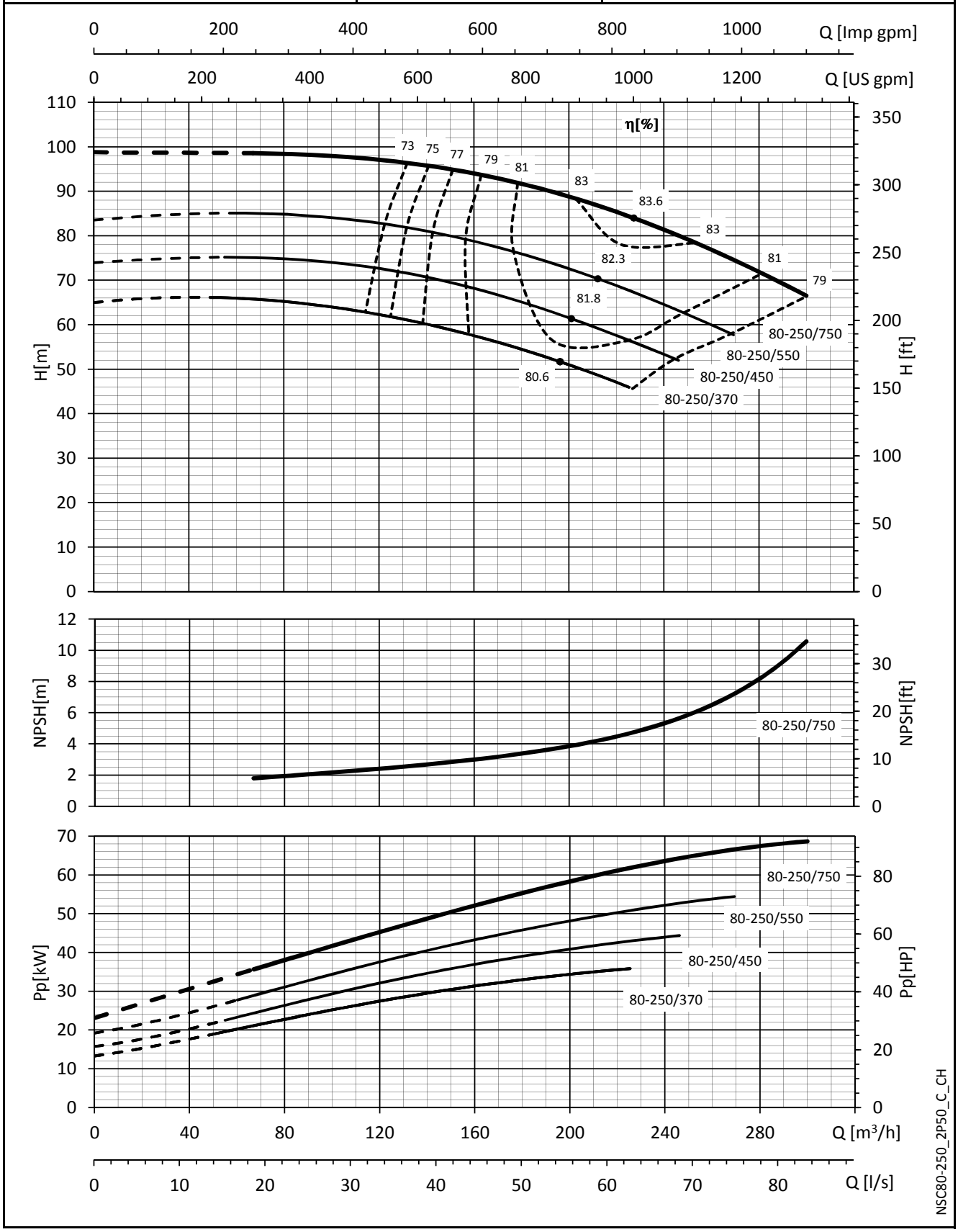

The NPSH values are laboratory values; for practical use we suggest increasing these values by 0,5 m.
These performances are valid for liquids with density ρ = 1,0 Kg/dm³ and kinematic viscosity ν = 1 mm²/sec.

LOWARA
a xylem brand

e-NSC SERIES
OPERATING CHARACTERISTICS AT 50 Hz, 2 POLES

NSC 80-316	~ 2950 [rpm]	ISO 9906:2012 - Grade 3B

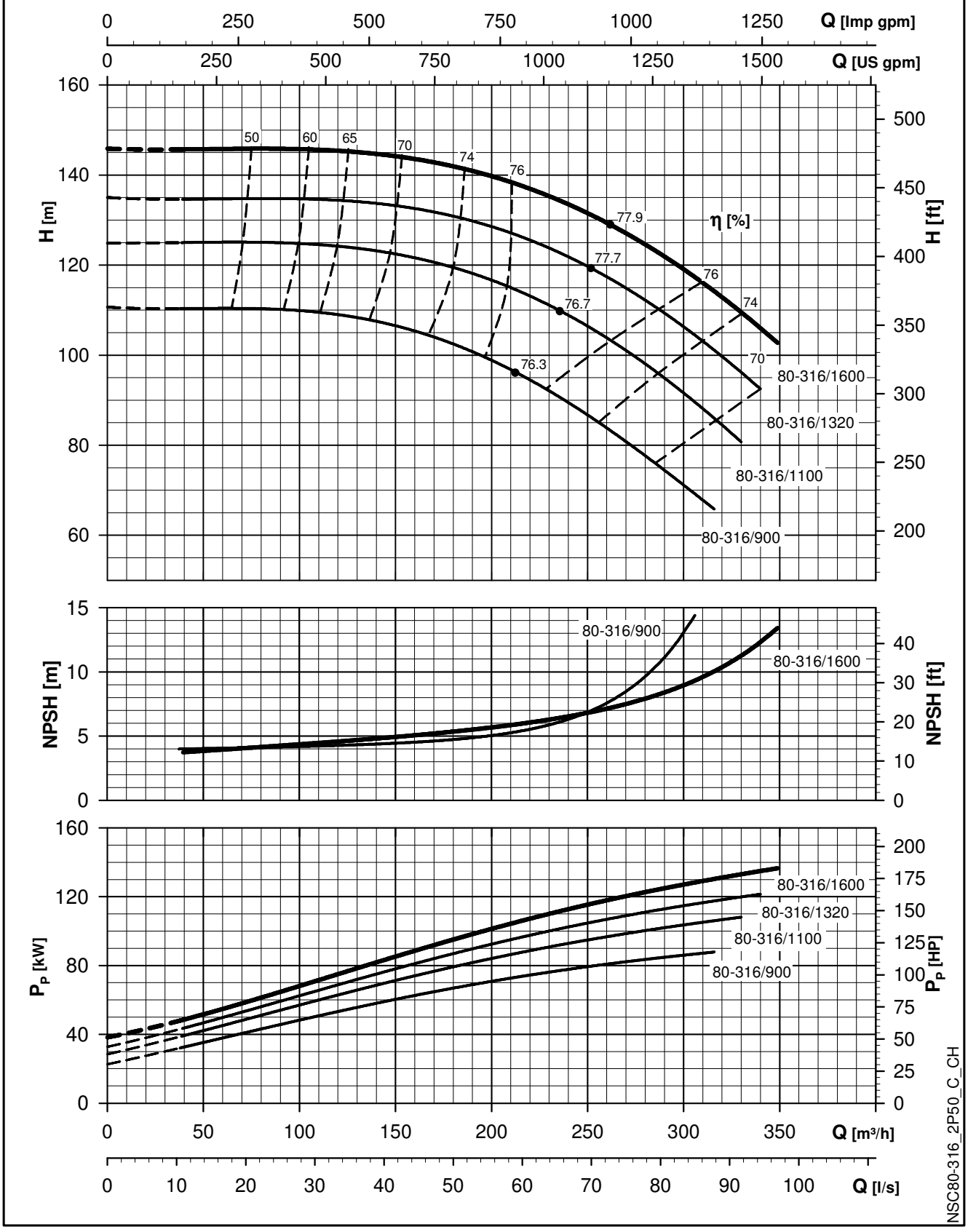

The NPSH values are laboratory values; for practical use we suggest increasing these values by 0,5 m.
These performances are valid for liquids with density ρ = 1,0 Kg/dm³ and kinematic viscosity ν = 1 mm²/sec.

e-NSC SERIES
OPERATING CHARACTERISTICS AT 50 Hz, 2 POLES

NSC 100-160	~ 2950 [rpm]	ISO 9906:2012 - Grade 3B

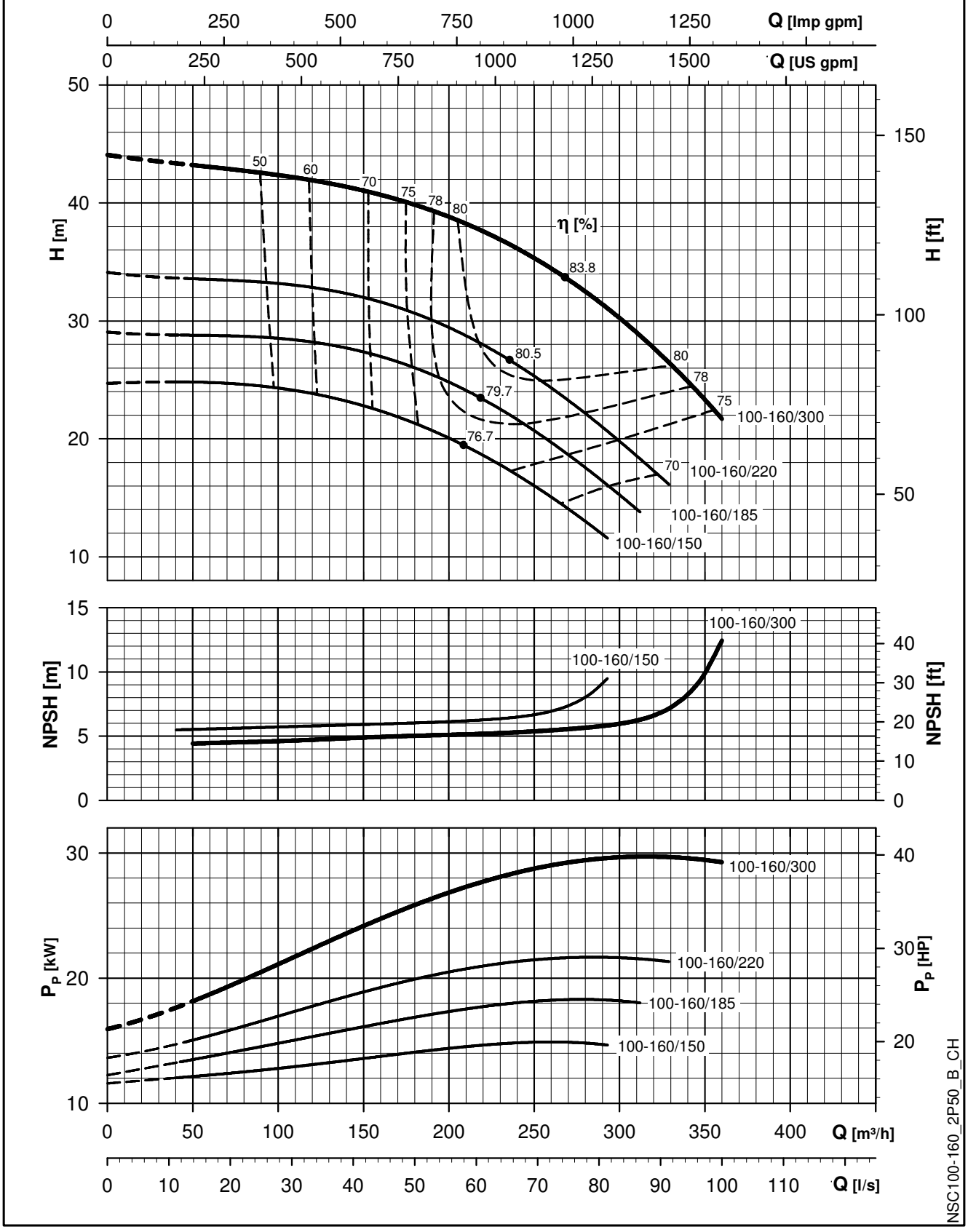

The NPSH values are laboratory values; for practical use we suggest increasing these values by 0,5 m.
These performances are valid for liquids with density ρ = 1,0 Kg/dm³ and kinematic viscosity ν = 1 mm²/sec.

LOWARA
a xylem brand

e-NSC SERIES
OPERATING CHARACTERISTICS AT 50 Hz, 2 POLES

NSC 100-200	~ 2950 [rpm]	ISO 9906:2012 - Grade 3B

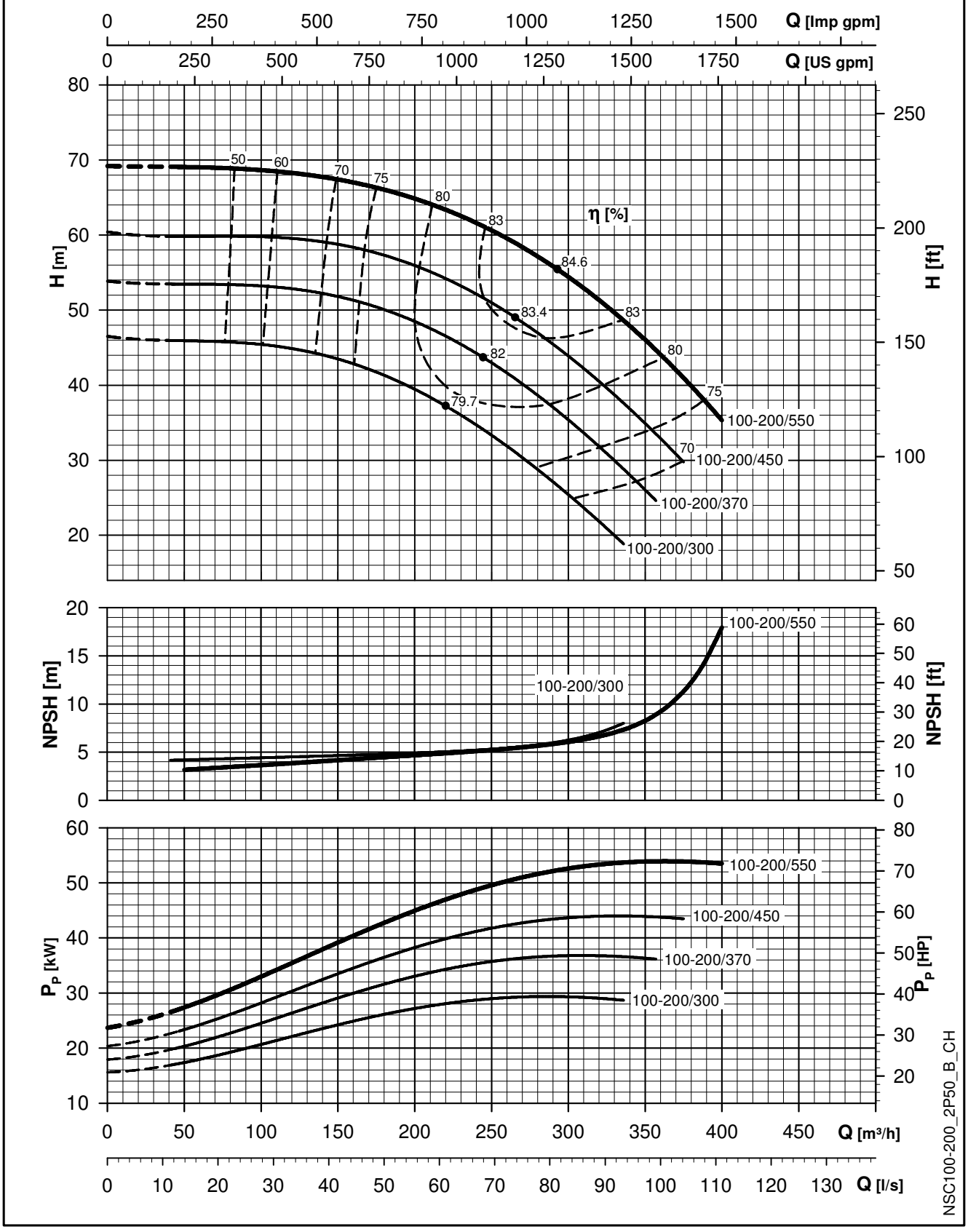

The NPSH values are laboratory values; for practical use we suggest increasing these values by 0,5 m.
These performances are valid for liquids with density $\rho = 1,0$ Kg/dm^3 and kinematic viscosity $\nu = 1$ mm^2/sec.

LOWARA
a xylem brand

e-NSC SERIES
OPERATING CHARACTERISTICS AT 50 Hz, 2 POLES

NSC 100-250	~ 2950 [rpm]	ISO 9906:2012 - Grade 3B

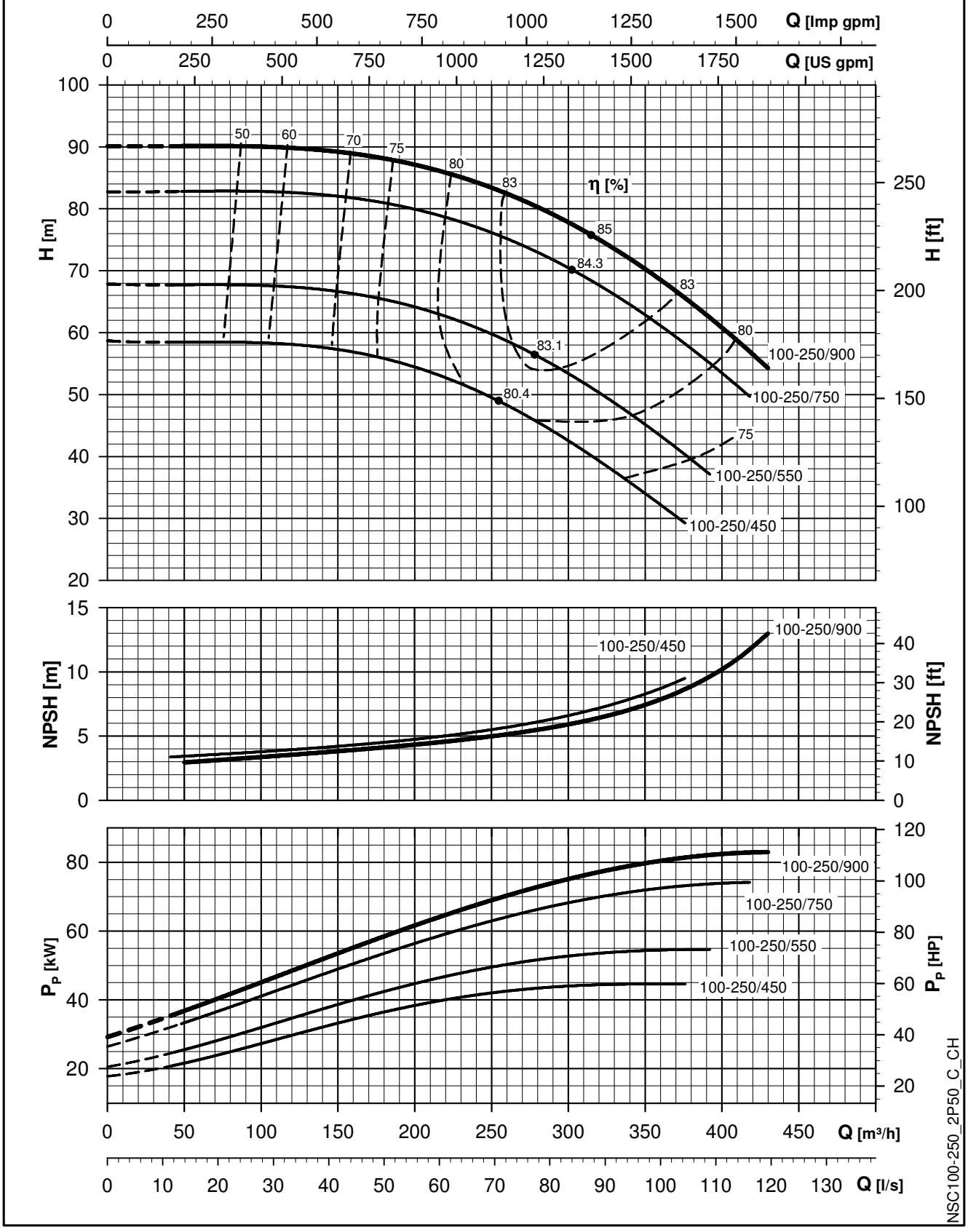

The NPSH values are laboratory values; for practical use we suggest increasing these values by 0,5 m.
These performances are valid for liquids with density ρ = 1,0 Kg/dm³ and kinematic viscosity ν = 1 mm²/sec.

LOWARA
a xylem brand

e-NSC SERIES
OPERATING CHARACTERISTICS AT 50 Hz, 2 POLES

NSC 100-316	~ 2950 [rpm]	ISO 9906:2012 - Grade 3B

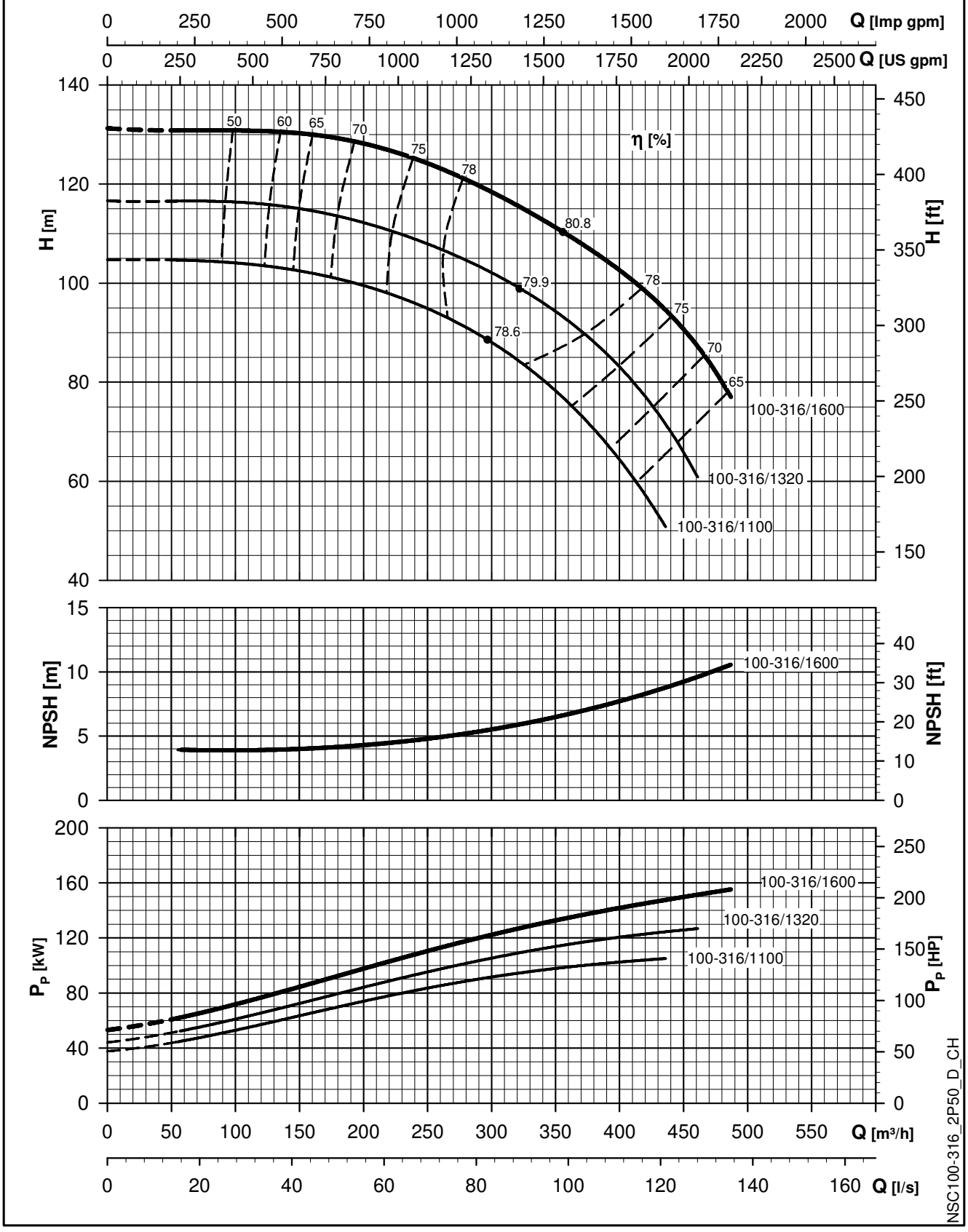

The NPSH values are laboratory values; for practical use we suggest increasing these values by 0,5 m.
These performances are valid for liquids with density $\rho = 1{,}0$ Kg/dm³ and kinematic viscosity $\nu = 1$ mm²/sec.

e-NSC SERIES
OPERATING CHARACTERISTICS AT 50 Hz, 2 POLES

NSC 125-200	~ 2950 [rpm]	ISO 9906:2012 - Grade 3B

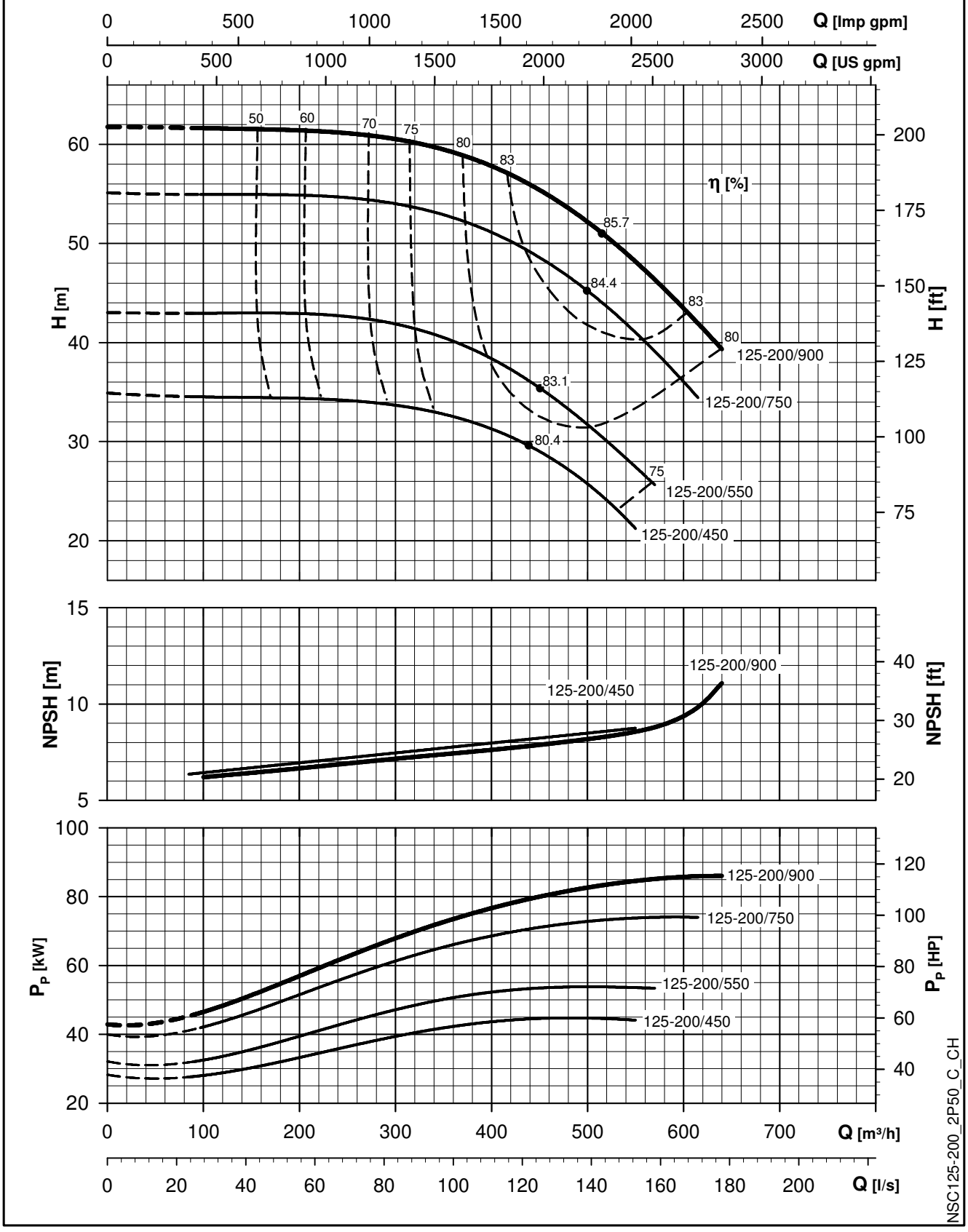

The NPSH values are laboratory values; for practical use we suggest increasing these values by 0,5 m.
These performances are valid for liquids with density $\rho = 1,0$ Kg/dm³ and kinematic viscosity $\nu = 1$ mm²/sec.

e-NSC SERIES
OPERATING CHARACTERISTICS AT 50 Hz, 2 POLES

NSC 125-315	~ 2950 [rpm]	ISO 9906:2012 - Grade 3B

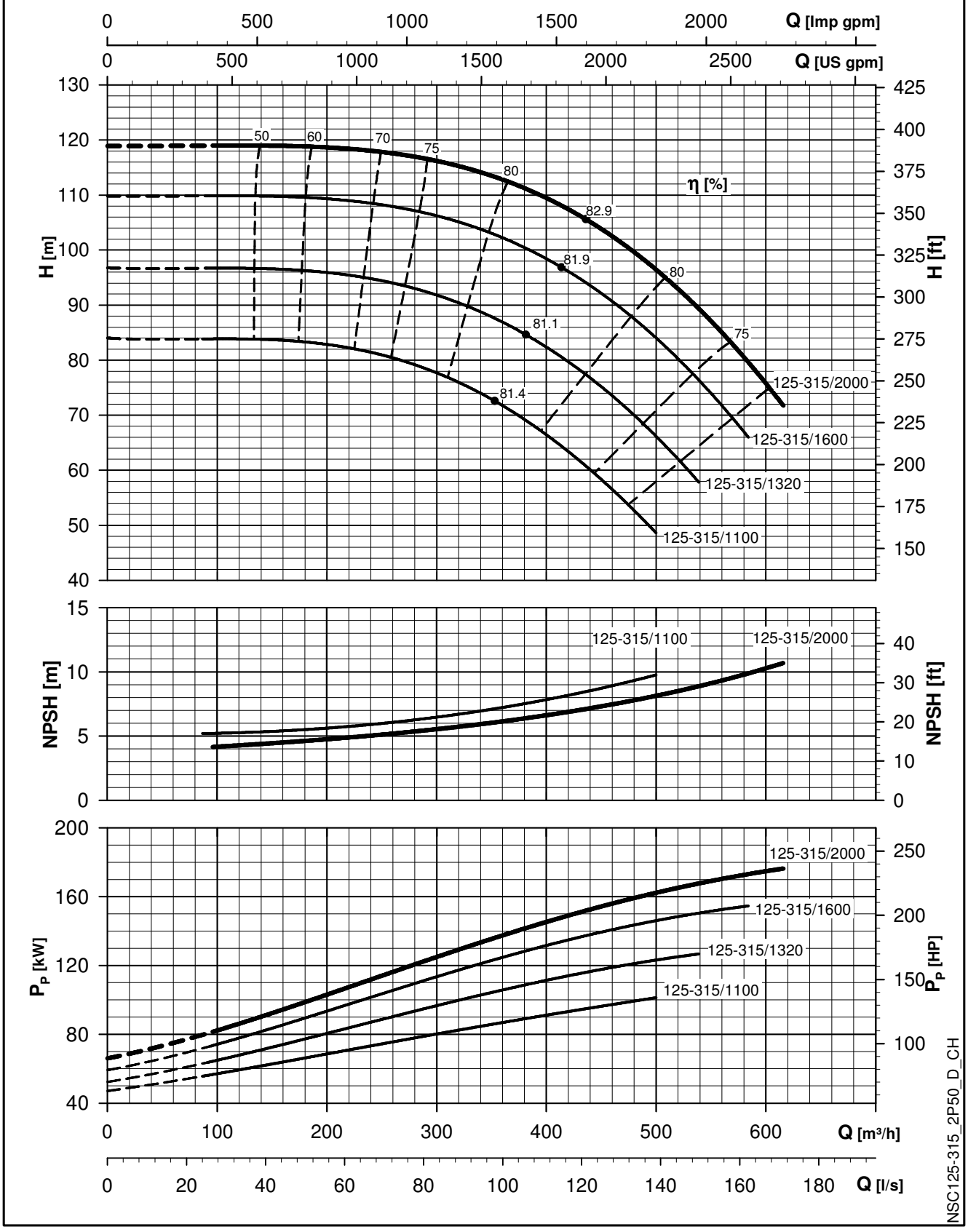

The NPSH values are laboratory values; for practical use we suggest increasing these values by 0,5 m.
These performances are valid for liquids with density ρ = 1,0 Kg/dm³ and kinematic viscosity ν = 1 mm²/sec.

LOWARA
a xylem brand

e-NSC SERIES
OPERATING CHARACTERISTICS AT 50 Hz, 4 POLES

NSC 32-125	~ 1450 [rpm]	ISO 9906:2012 - Grade 3B

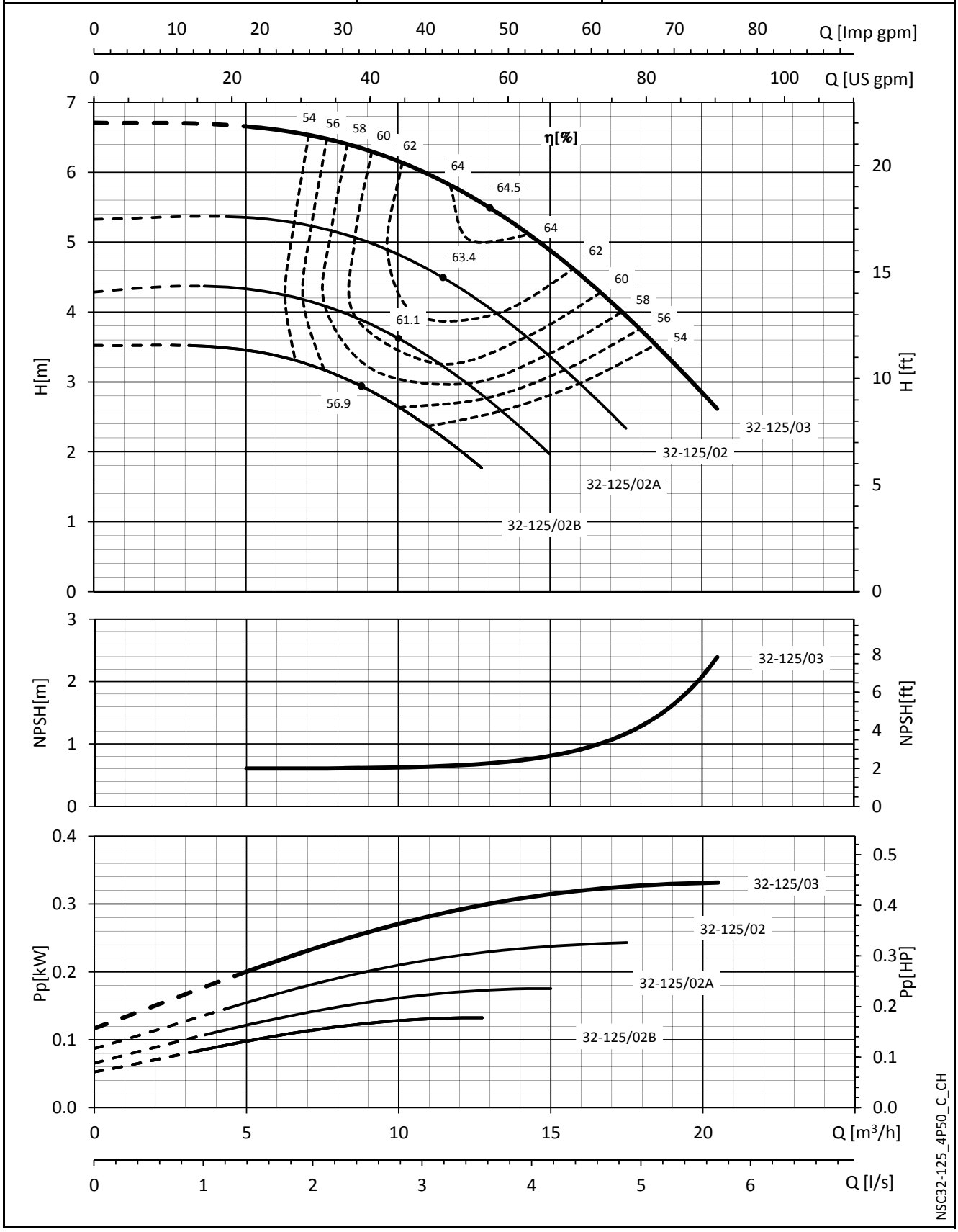

The NPSH values are laboratory values; for practical use we suggest increasing these values by 0,5 m.
These performances are valid for liquids with density ρ = 1,0 Kg/dm³ and kinematic viscosity ν = 1 mm²/sec.

LOWARA
a xylem brand

e-NSC SERIES
OPERATING CHARACTERISTICS AT 50 Hz, 4 POLES

NSC 32-160	~ 1450 [rpm]	ISO 9906:2012 - Grade 3B

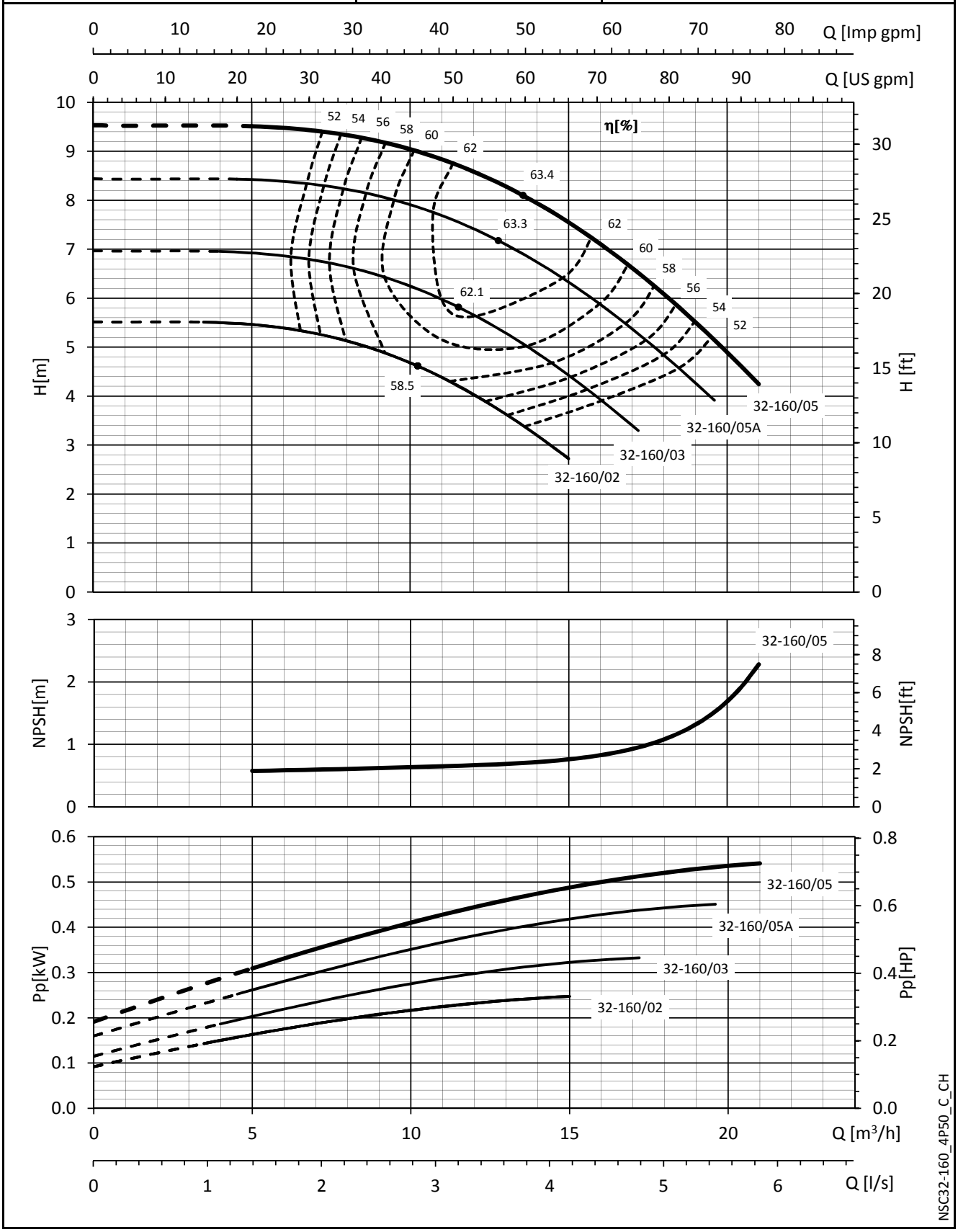

The NPSH values are laboratory values; for practical use we suggest increasing these values by 0,5 m.
These performances are valid for liquids with density ρ = 1,0 Kg/dm³ and kinematic viscosity ν = 1 mm²/sec.

LOWARA
a xylem brand

e-NSC SERIES
OPERATING CHARACTERISTICS AT 50 Hz, 4 POLES

NSC 32-200	~ 1450 [rpm]	ISO 9906:2012 - Grade 3B

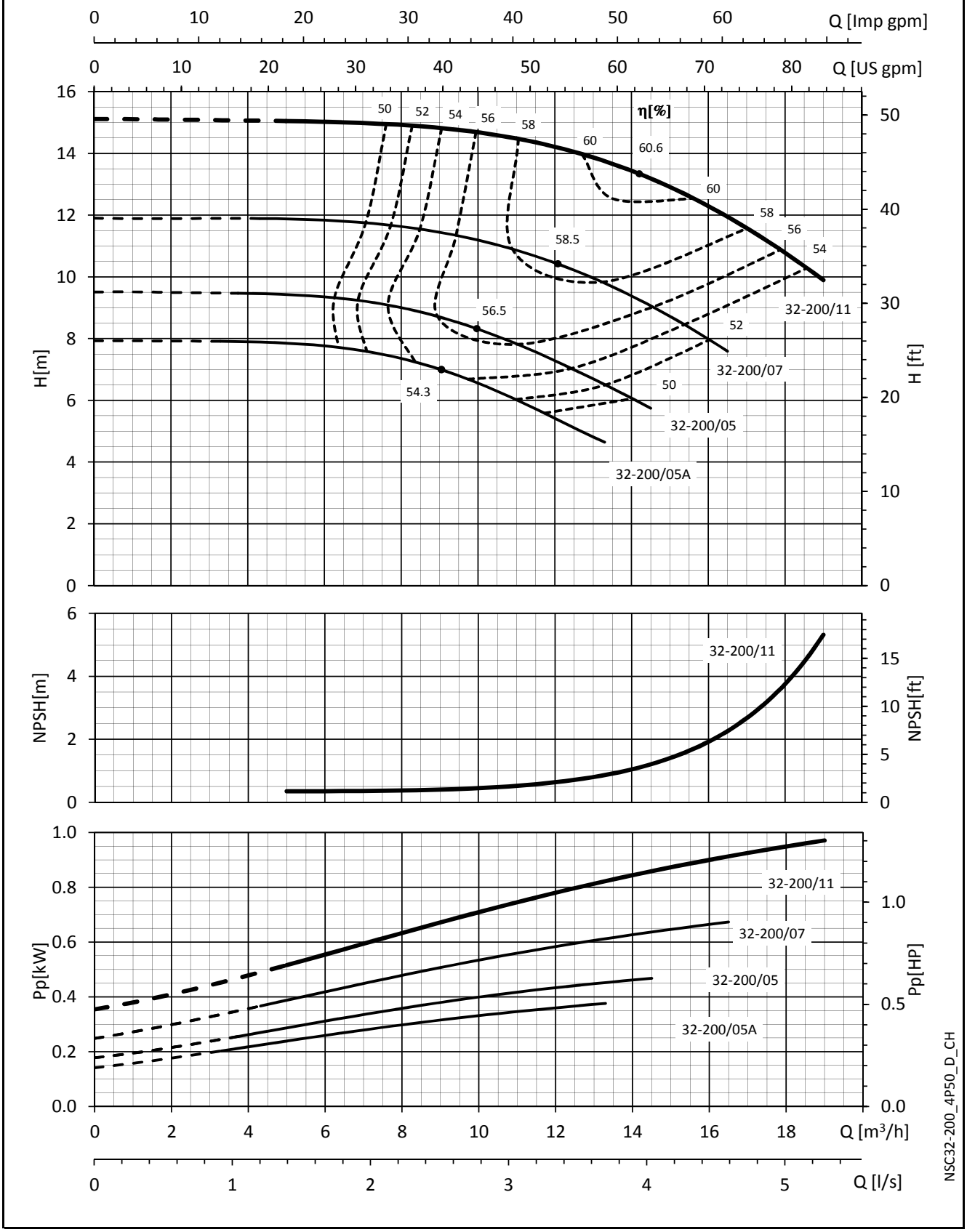

The NPSH values are laboratory values; for practical use we suggest increasing these values by 0,5 m.
These performances are valid for liquids with density ρ = 1,0 Kg/dm³ and kinematic viscosity ν = 1 mm²/sec.

LOWARA
a xylem brand

e-NSC SERIES
OPERATING CHARACTERISTICS AT 50 Hz, 4 POLES

NSC2 32-250	~ 1450 [rpm]	ISO 9906:2012 - Grade 3B

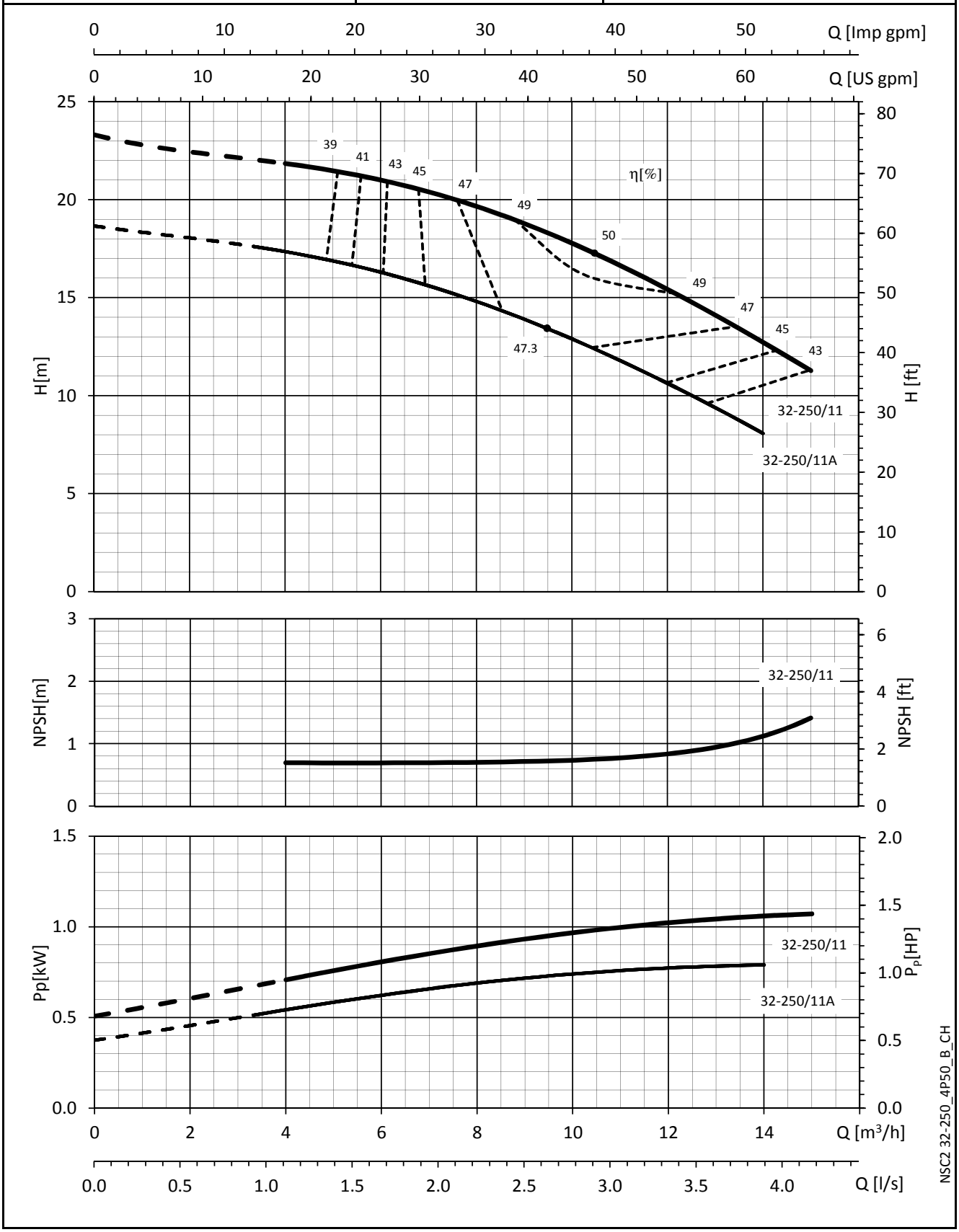

The NPSH values are laboratory values; for practical use we suggest increasing these values by 0,5 m.
These performances are valid for liquids with density ρ = 1,0 Kg/dm³ and kinematic viscosity ν = 1 mm²/sec.

e-NSC SERIES
OPERATING CHARACTERISTICS AT 50 Hz, 4 POLES

NSC 32-250	~ 1450 [rpm]	ISO 9906:2012 - Grade 3B

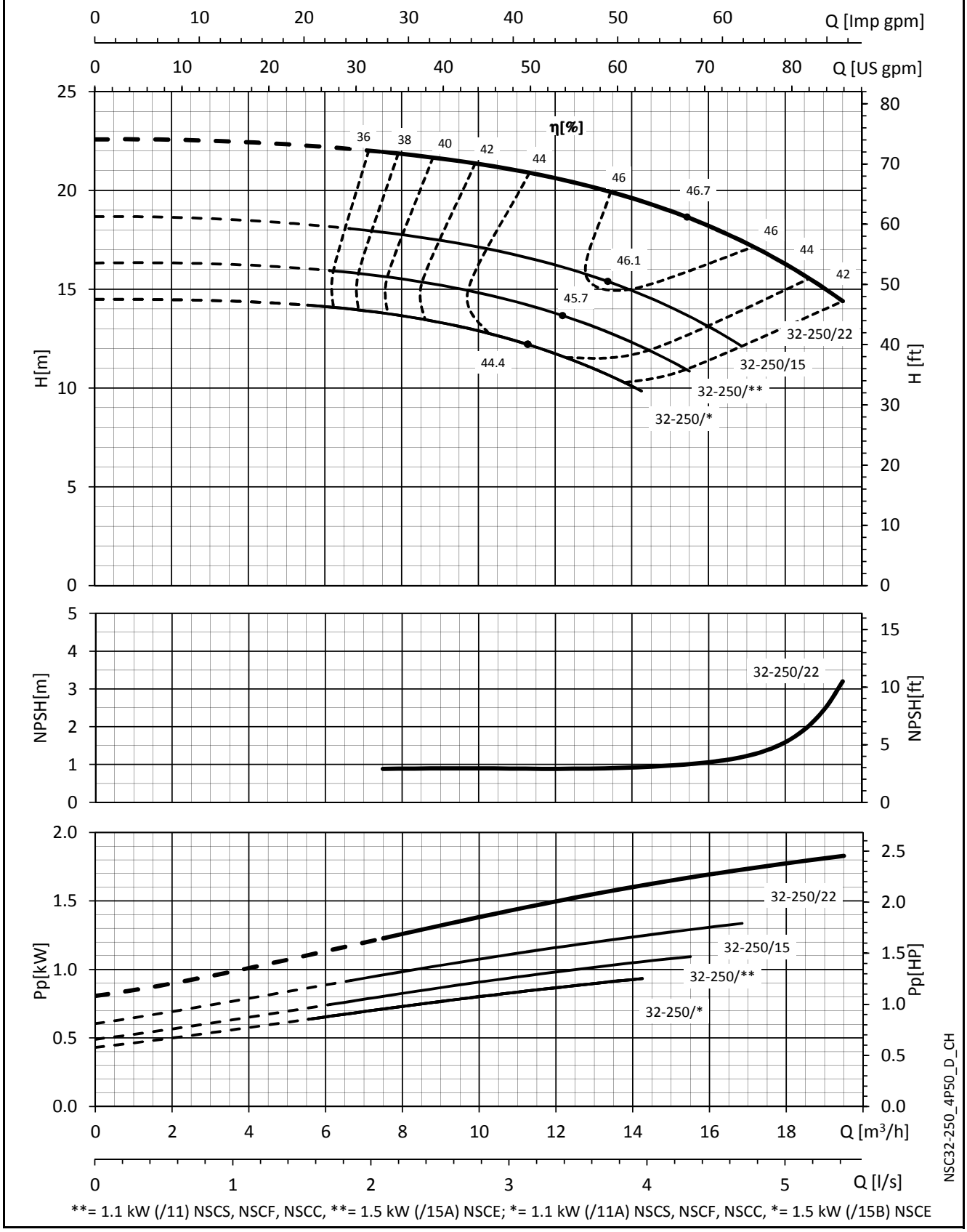

**= 1.1 kW (/11) NSCS, NSCF, NSCC, **= 1.5 kW (/15A) NSCE; *= 1.1 kW (/11A) NSCS, NSCF, NSCC, *= 1.5 kW (/15B) NSCE

The NPSH values are laboratory values; for practical use we suggest increasing these values by 0,5 m.
These performances are valid for liquids with density ρ = 1,0 Kg/dm³ and kinematic viscosity ν = 1 mm²/sec.

LOWARA
a xylem brand

e-NSC SERIES
OPERATING CHARACTERISTICS AT 50 Hz, 4 POLES

NSC 40-125	~ 1450 [rpm]	ISO 9906:2012 - Grade 3B

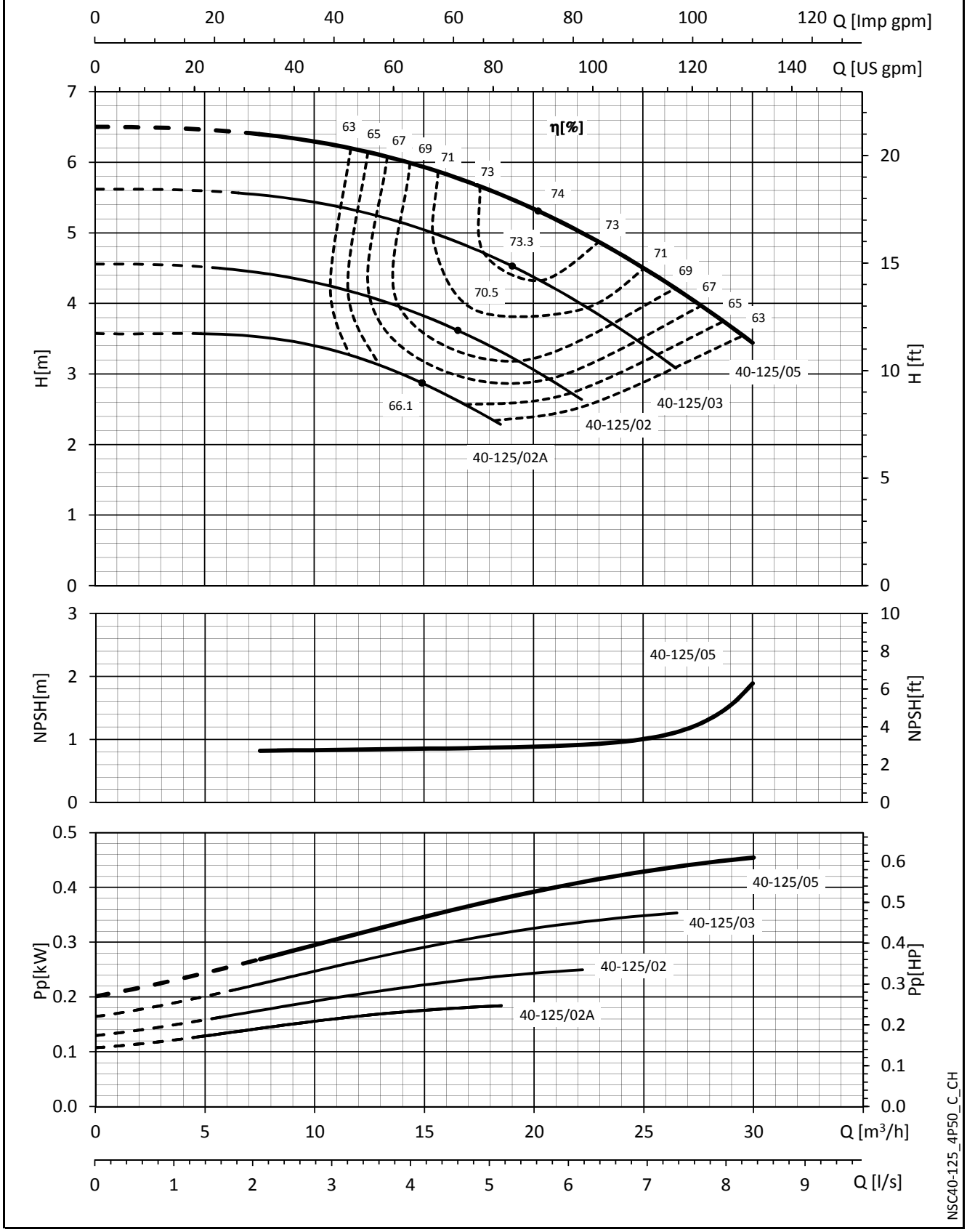

The NPSH values are laboratory values; for practical use we suggest increasing these values by 0,5 m.
These performances are valid for liquids with density ρ = 1,0 Kg/dm³ and kinematic viscosity ν = 1 mm²/sec.

LOWARA
a xylem brand

e-NSC SERIES
OPERATING CHARACTERISTICS AT 50 Hz, 4 POLES

NSC 40-160	~ 1450 [rpm]	ISO 9906:2012 - Grade 3B

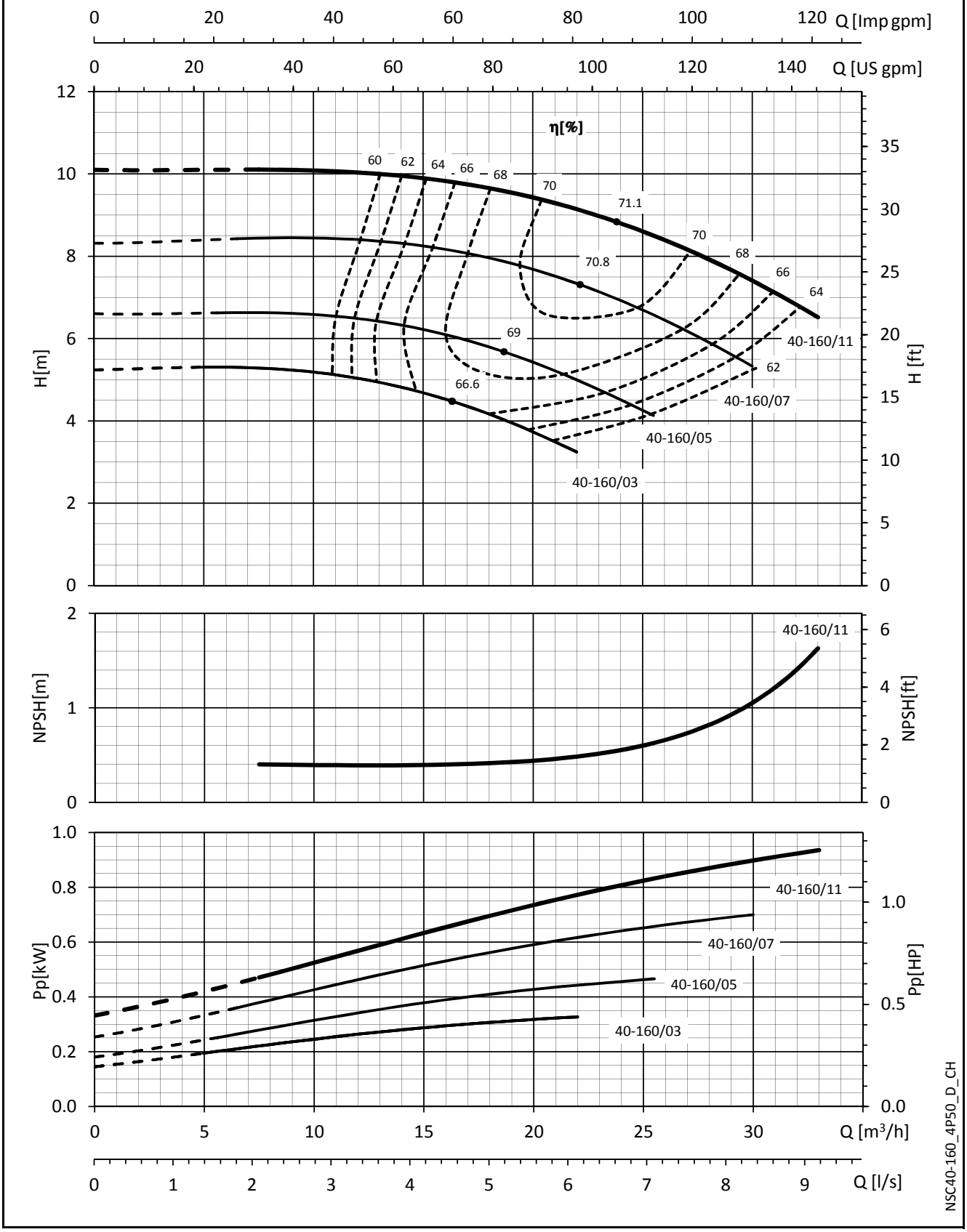

The NPSH values are laboratory values; for practical use we suggest increasing these values by 0,5 m.
These performances are valid for liquids with density ρ = 1,0 Kg/dm³ and kinematic viscosity ν = 1 mm²/sec.

LOWARA
a xylem brand

e-NSC SERIES
OPERATING CHARACTERISTICS AT 50 Hz, 4 POLES

NSC 40-200	~ 1450 [rpm]	ISO 9906:2012 - Grade 3B

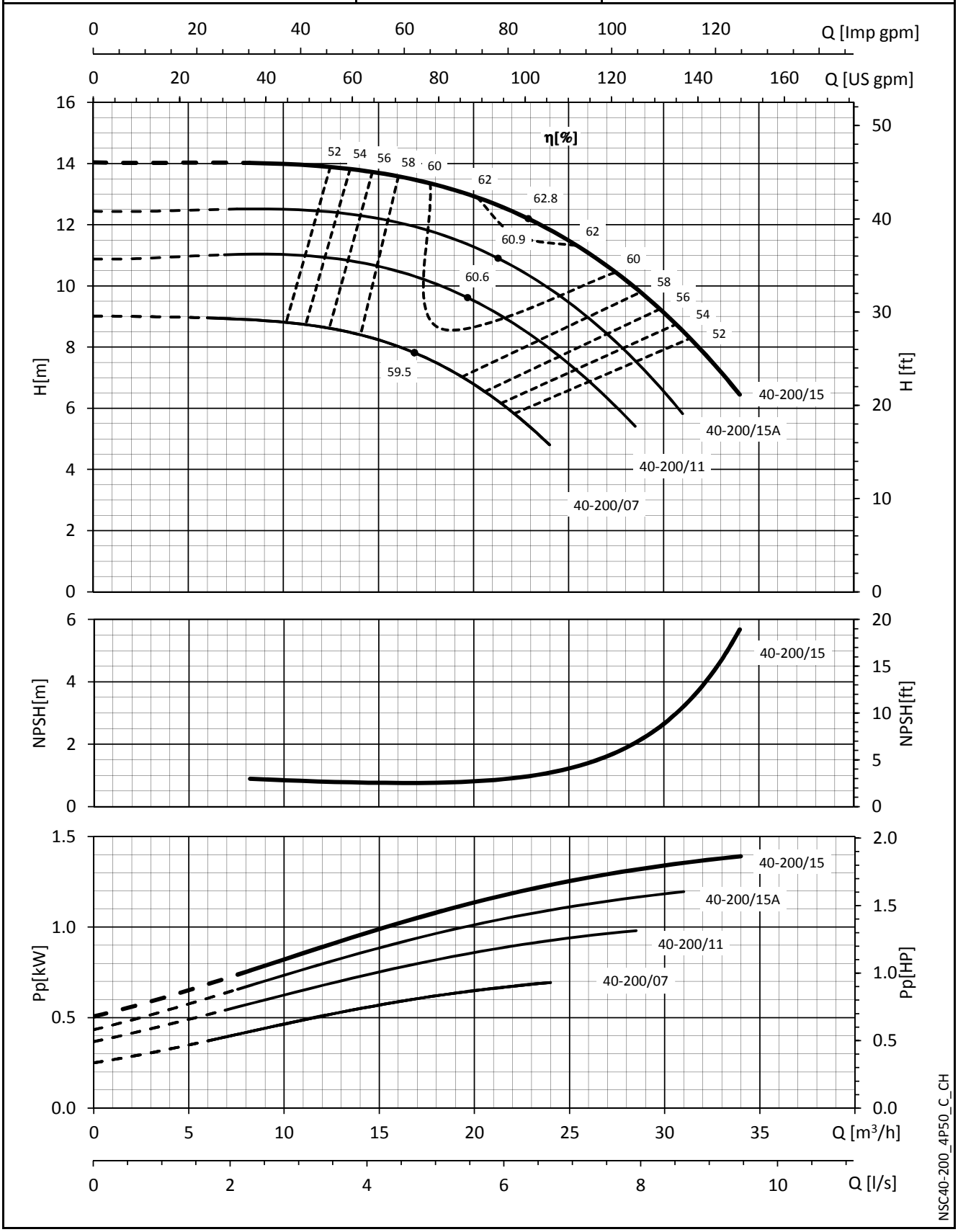

The NPSH values are laboratory values; for practical use we suggest increasing these values by 0,5 m.
These performances are valid for liquids with density ρ = 1,0 Kg/dm³ and kinematic viscosity ν = 1 mm²/sec.

e-NSC SERIES
OPERATING CHARACTERISTICS AT 50 Hz, 4 POLES

NSC 40-250	~ 1450 [rpm]	ISO 9906:2012 - Grade 3B

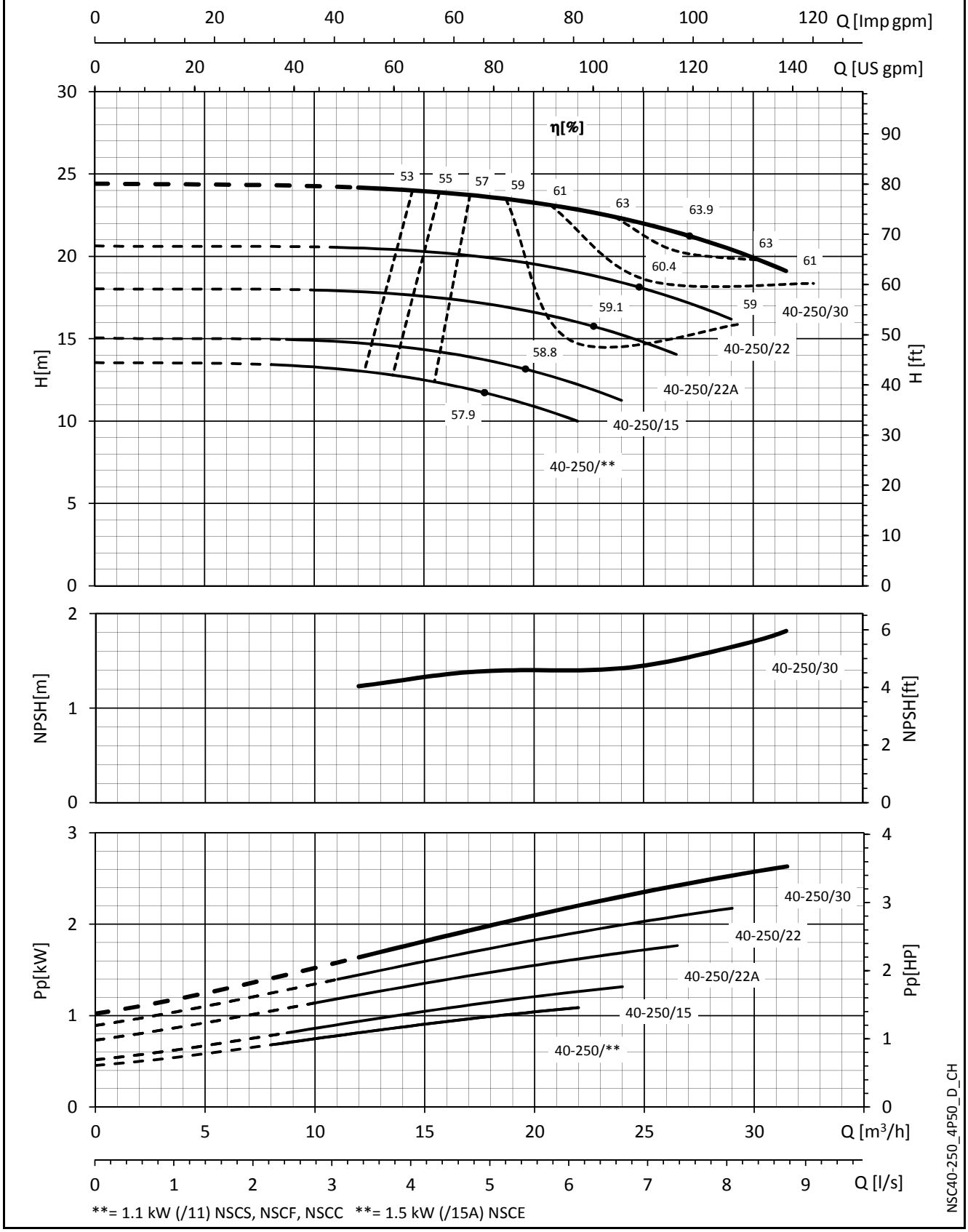

**= 1.1 kW (/11) NSCS, NSCF, NSCC **= 1.5 kW (/15A) NSCE

The NPSH values are laboratory values; for practical use we suggest increasing these values by 0,5 m.
These performances are valid for liquids with density ρ = 1,0 Kg/dm³ and kinematic viscosity ν = 1 mm²/sec.

LOWARA
a xylem brand

e-NSC SERIES
OPERATING CHARACTERISTICS AT 50 Hz, 4 POLES

NSC 50-125	~ 1450 [rpm]	ISO 9906:2012 - Grade 3B

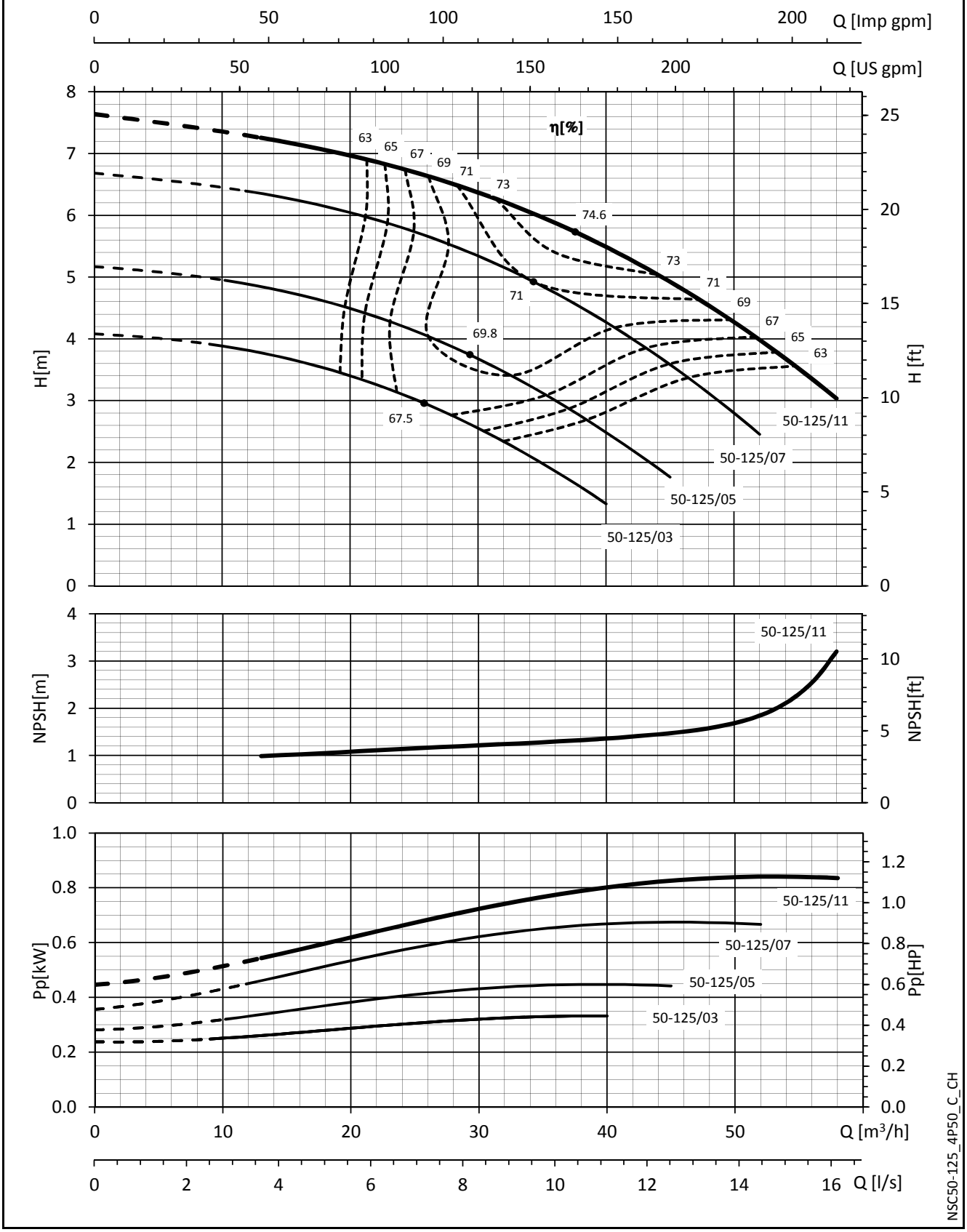

The NPSH values are laboratory values; for practical use we suggest increasing these values by 0,5 m.
These performances are valid for liquids with density ρ = 1,0 Kg/dm³ and kinematic viscosity ν = 1 mm²/sec.

LOWARA
a xylem brand

e-NSC SERIES
OPERATING CHARACTERISTICS AT 50 Hz, 4 POLES

NSC 50-160	~ 1450 [rpm]	ISO 9906:2012 - Grade 3B

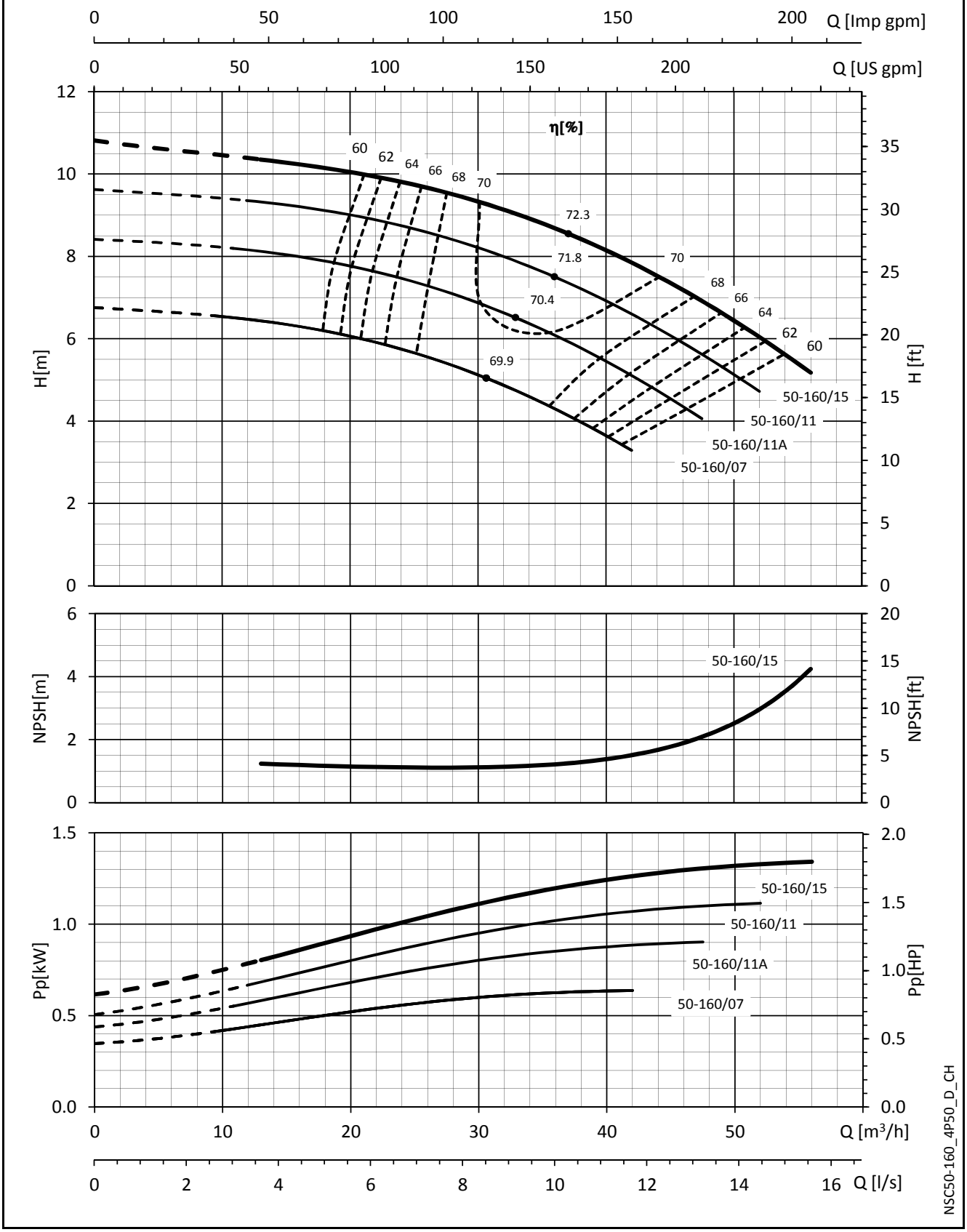

The NPSH values are laboratory values; for practical use we suggest increasing these values by 0,5 m.
These performances are valid for liquids with density ρ = 1,0 Kg/dm³ and kinematic viscosity ν = 1 mm²/sec.

LOWARA
a xylem brand

e-NSC SERIES
OPERATING CHARACTERISTICS AT 50 Hz, 4 POLES

NSC 50-200	~ 1450 [rpm]	ISO 9906:2012 - Grade 3B

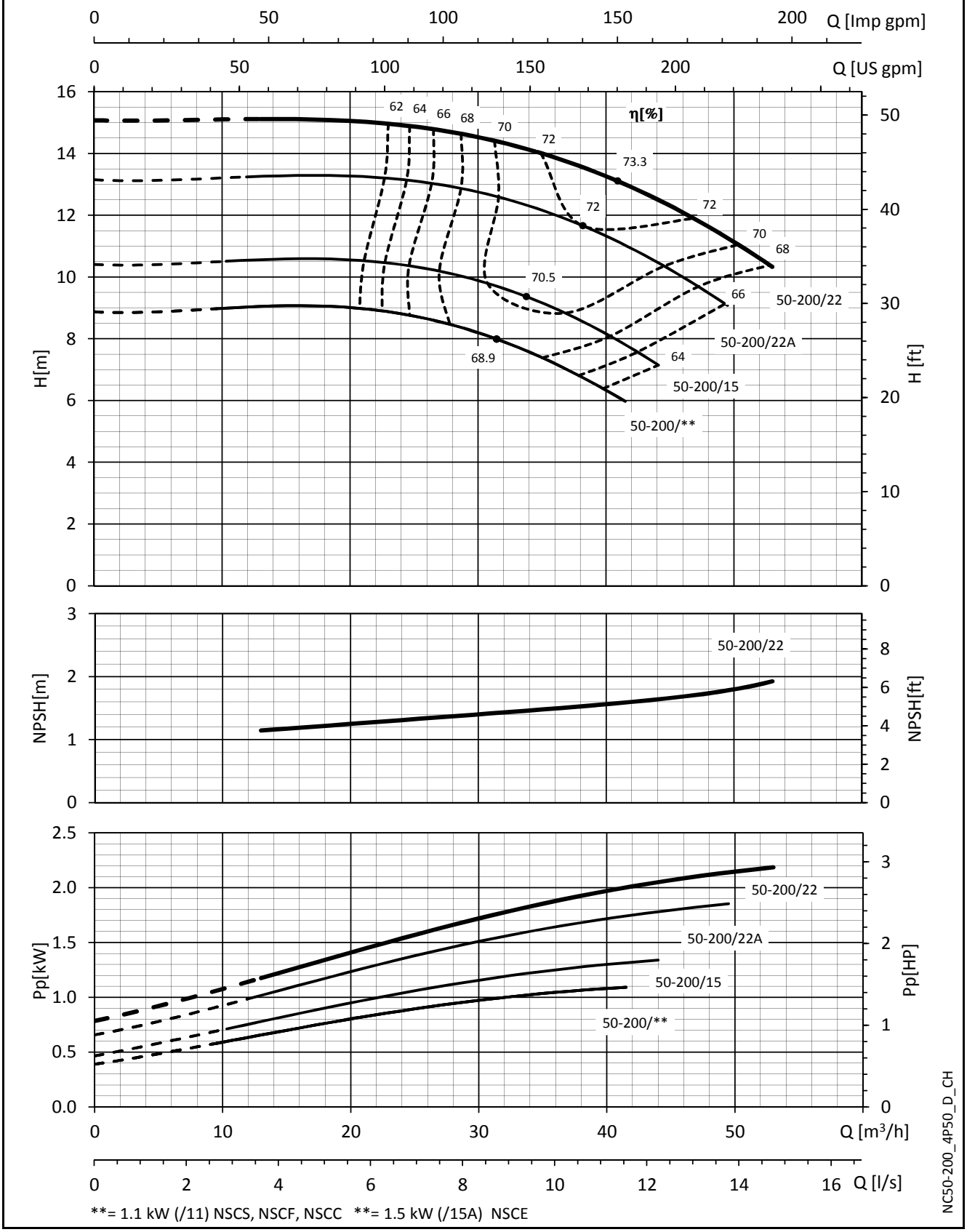

The NPSH values are laboratory values; for practical use we suggest increasing these values by 0,5 m.
These performances are valid for liquids with density ρ = 1,0 Kg/dm³ and kinematic viscosity ν = 1 mm²/sec.

LOWARA
a xylem brand

e-NSC SERIES
OPERATING CHARACTERISTICS AT 50 Hz, 4 POLES

NSC 50-250	~ 1450 [rpm]	ISO 9906:2012 - Grade 3B

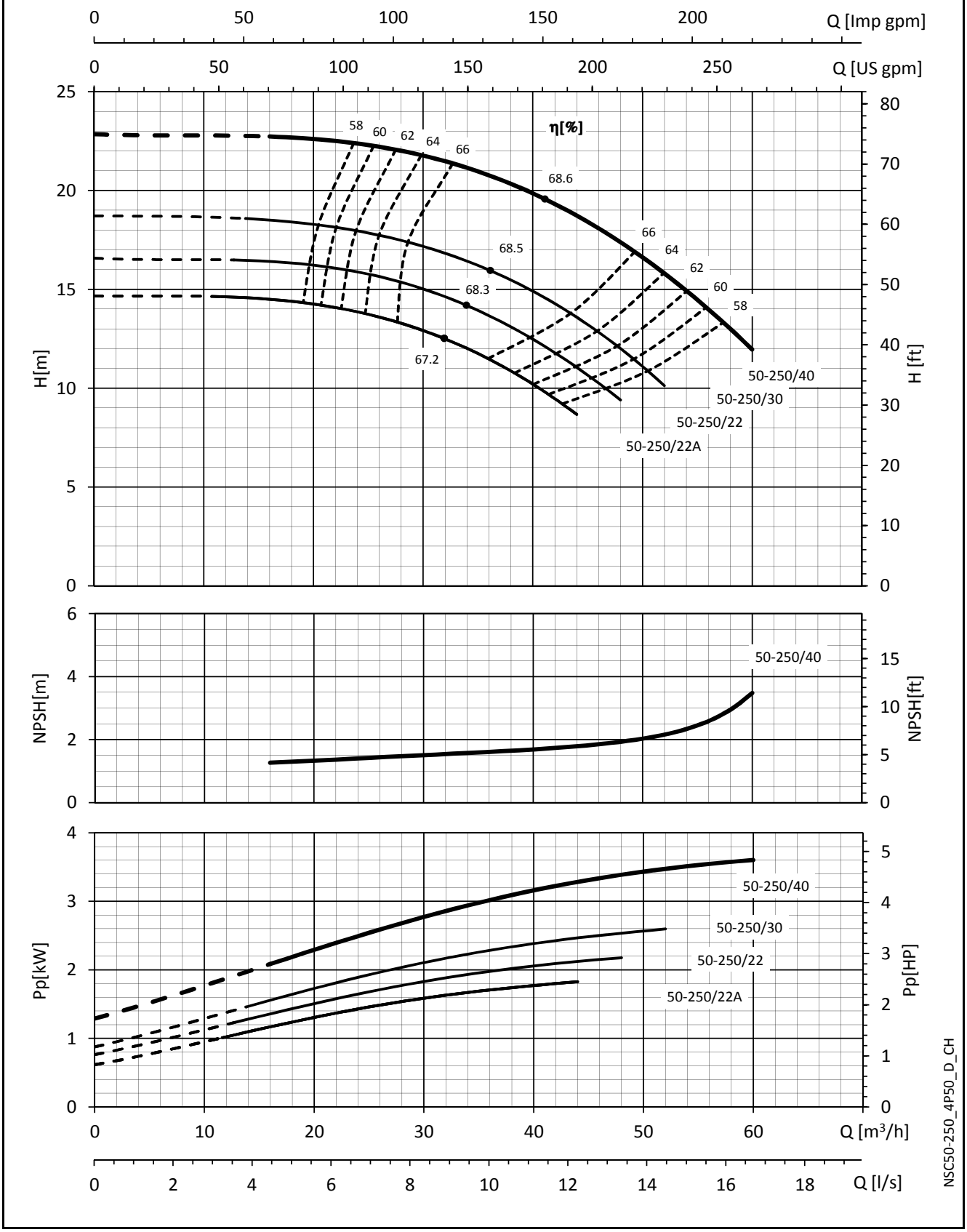

The NPSH values are laboratory values; for practical use we suggest increasing these values by 0,5 m.
These performances are valid for liquids with density ρ = 1,0 Kg/dm³ and kinematic viscosity ν = 1 mm²/sec.

LOWARA
a xylem brand

e-NSC SERIES
OPERATING CHARACTERISTICS AT 50 Hz, 4 POLES

NSC 50-315	~ 1450 [rpm]	ISO 9906:2012 - Grade 3B

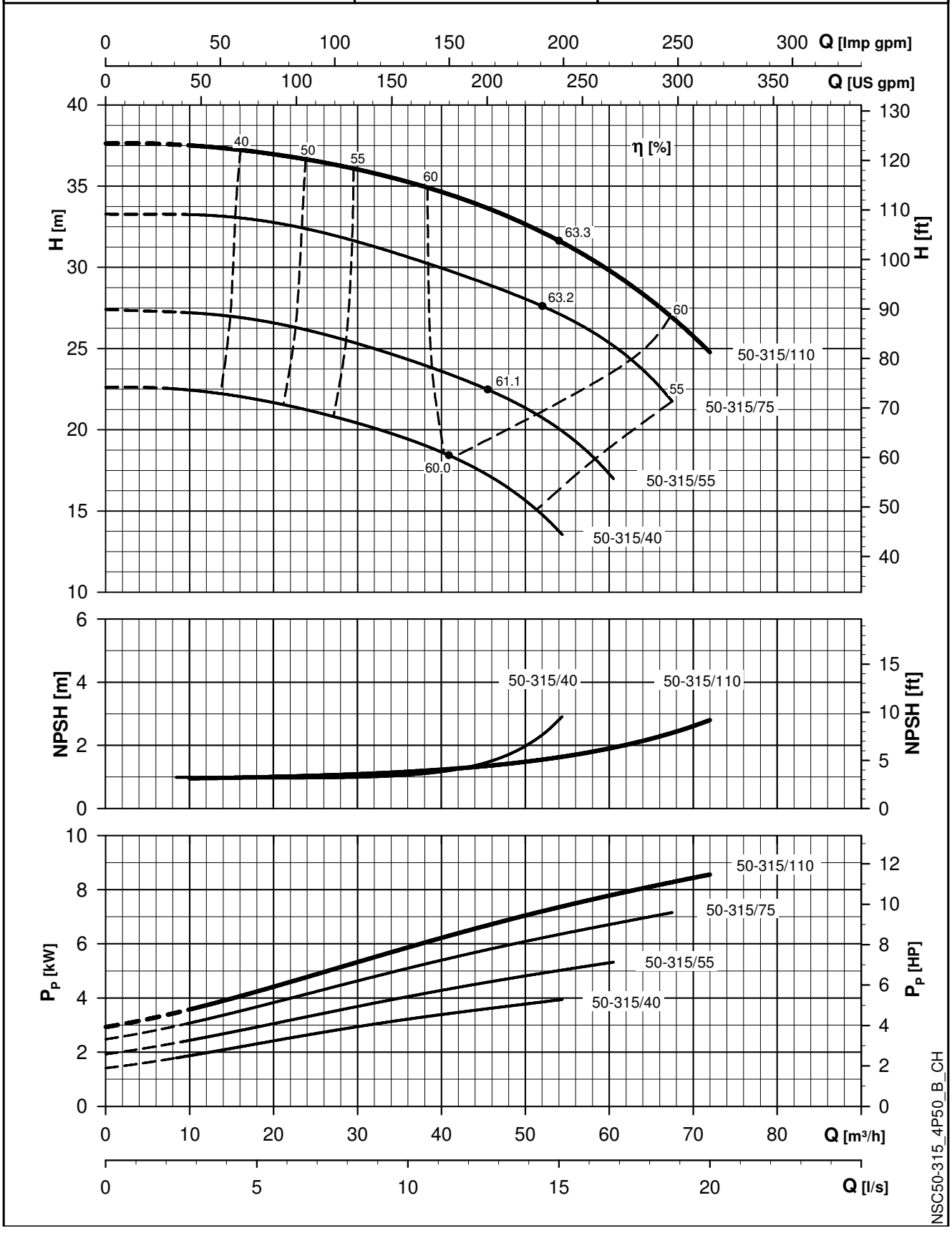

The NPSH values are laboratory values; for practical use we suggest increasing these values by 0,5 m.
These performances are valid for liquids with density $\rho = 1,0$ Kg/dm³ and kinematic viscosity $\nu = 1$ mm²/sec.

LOWARA
a xylem brand

e-NSC SERIES
OPERATING CHARACTERISTICS AT 50 Hz, 4 POLES

NSC 65-125	~ 1450 [rpm]	ISO 9906:2012 - Grade 3B

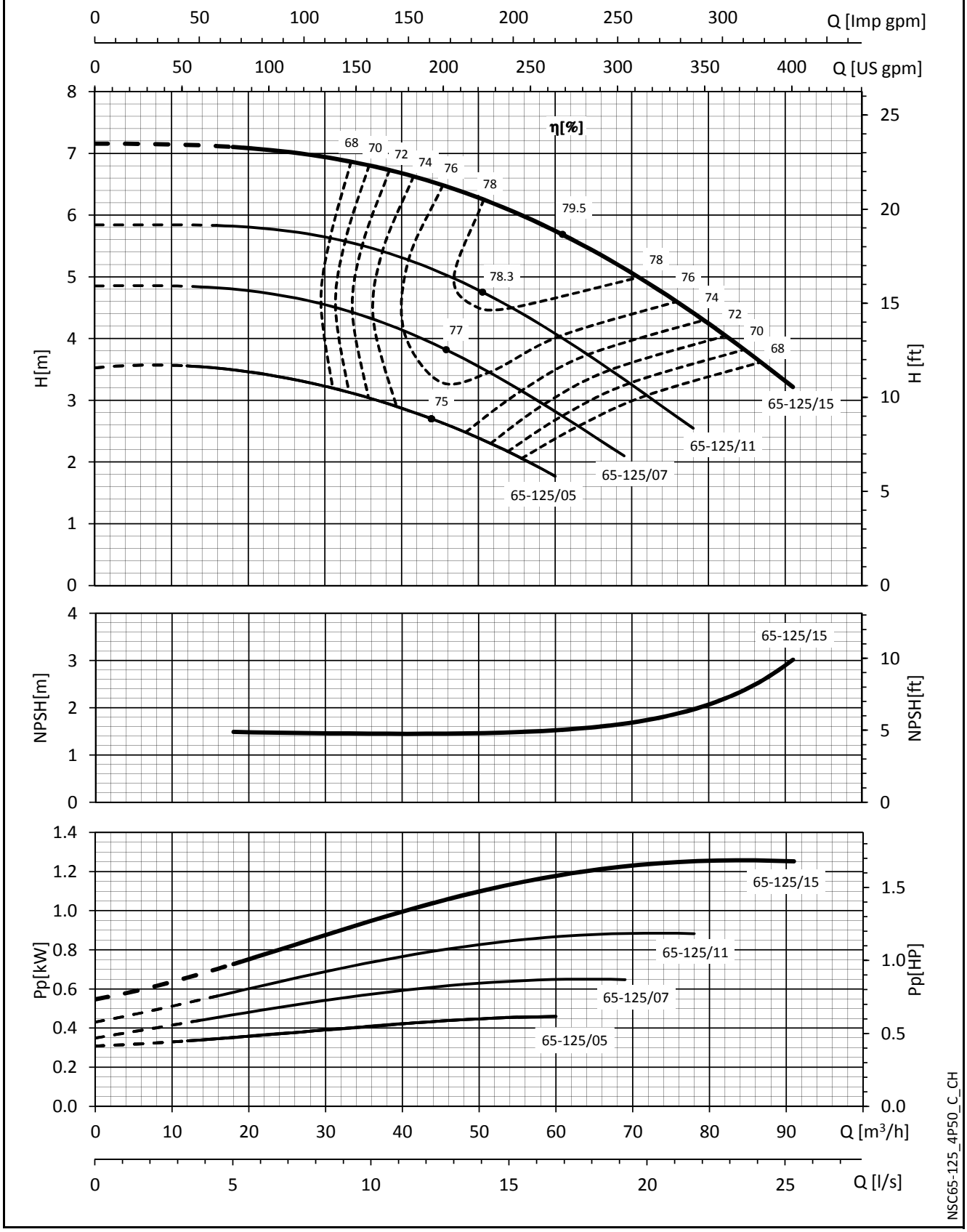

The NPSH values are laboratory values; for practical use we suggest increasing these values by 0,5 m.
These performances are valid for liquids with density ρ = 1,0 Kg/dm³ and kinematic viscosity ν = 1 mm²/sec.

LOWARA
a xylem brand

e-NSC SERIES
OPERATING CHARACTERISTICS AT 50 Hz, 4 POLES

NSC 65-160	~ 1450 [rpm]	ISO 9906:2012 - Grade 3B

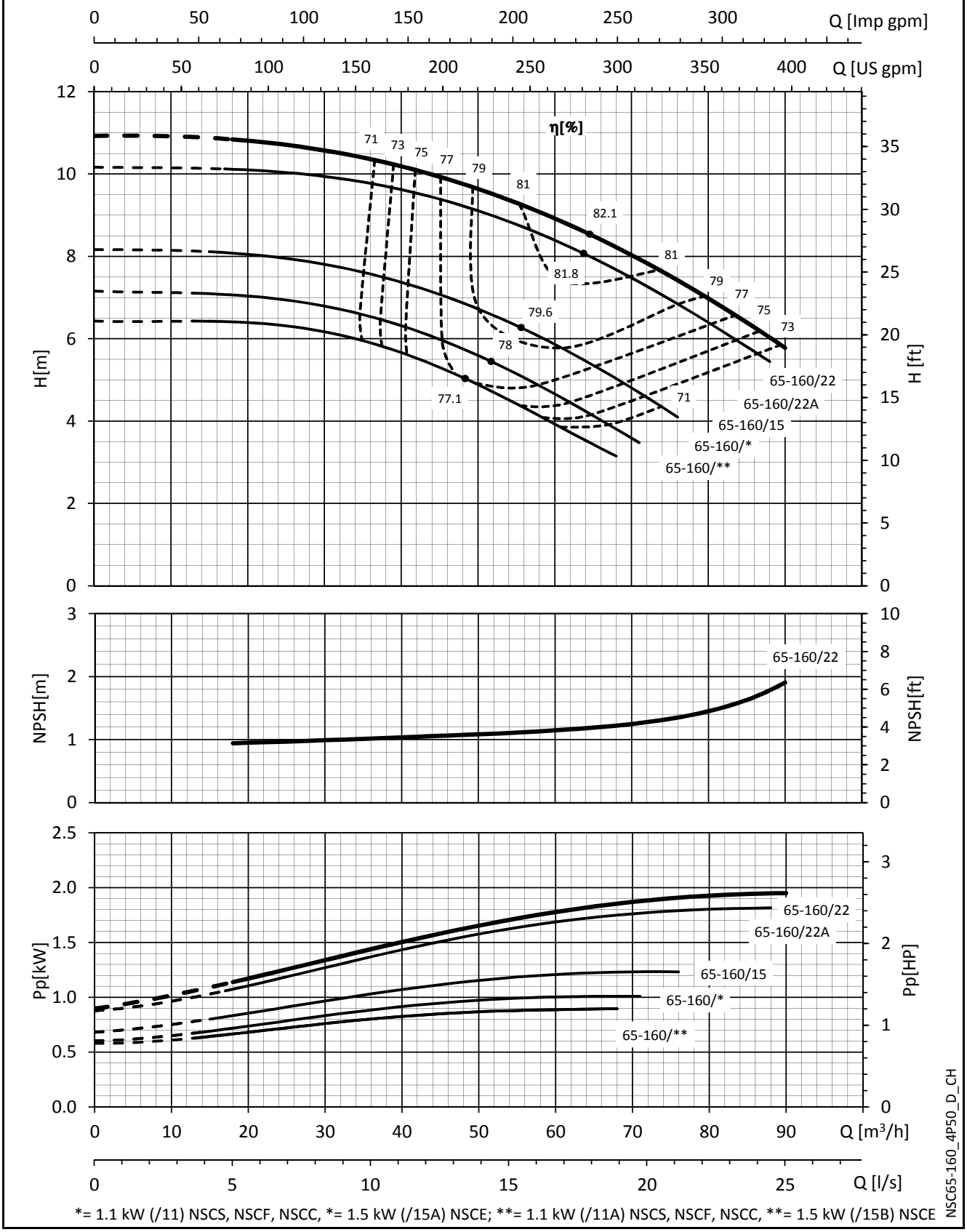

*= 1.1 kW (/11) NSCS, NSCF, NSCC, *= 1.5 kW (/15A) NSCE; **= 1.1 kW (/11A) NSCS, NSCF, NSCC, **= 1.5 kW (/15B) NSCE

The NPSH values are laboratory values; for practical use we suggest increasing these values by 0,5 m.
These performances are valid for liquids with density ρ = 1,0 Kg/dm³ and kinematic viscosity ν = 1 mm²/sec.

LOWARA
a xylem brand

e-NSC SERIES
OPERATING CHARACTERISTICS AT 50 Hz, 4 POLES

NSC 65-200	~ 1450 [rpm]	ISO 9906:2012 - Grade 3B

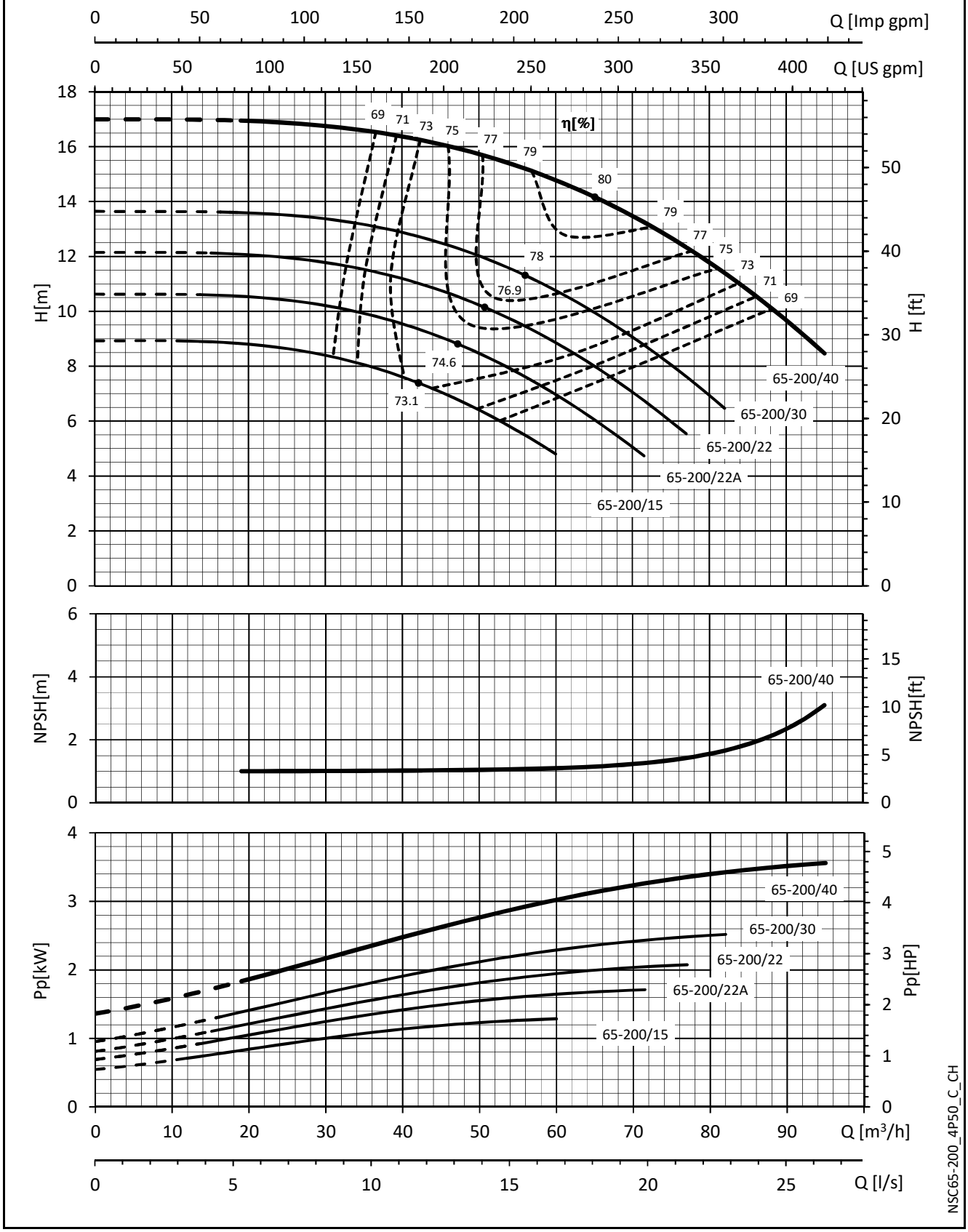

The NPSH values are laboratory values; for practical use we suggest increasing these values by 0,5 m.
These performances are valid for liquids with density ρ = 1,0 Kg/dm³ and kinematic viscosity ν = 1 mm²/sec.

LOWARA
a xylem brand

e-NSC SERIES
OPERATING CHARACTERISTICS AT 50 Hz, 4 POLES

NSC 65-250	~ 1450 [rpm]	ISO 9906:2012 - Grade 3B

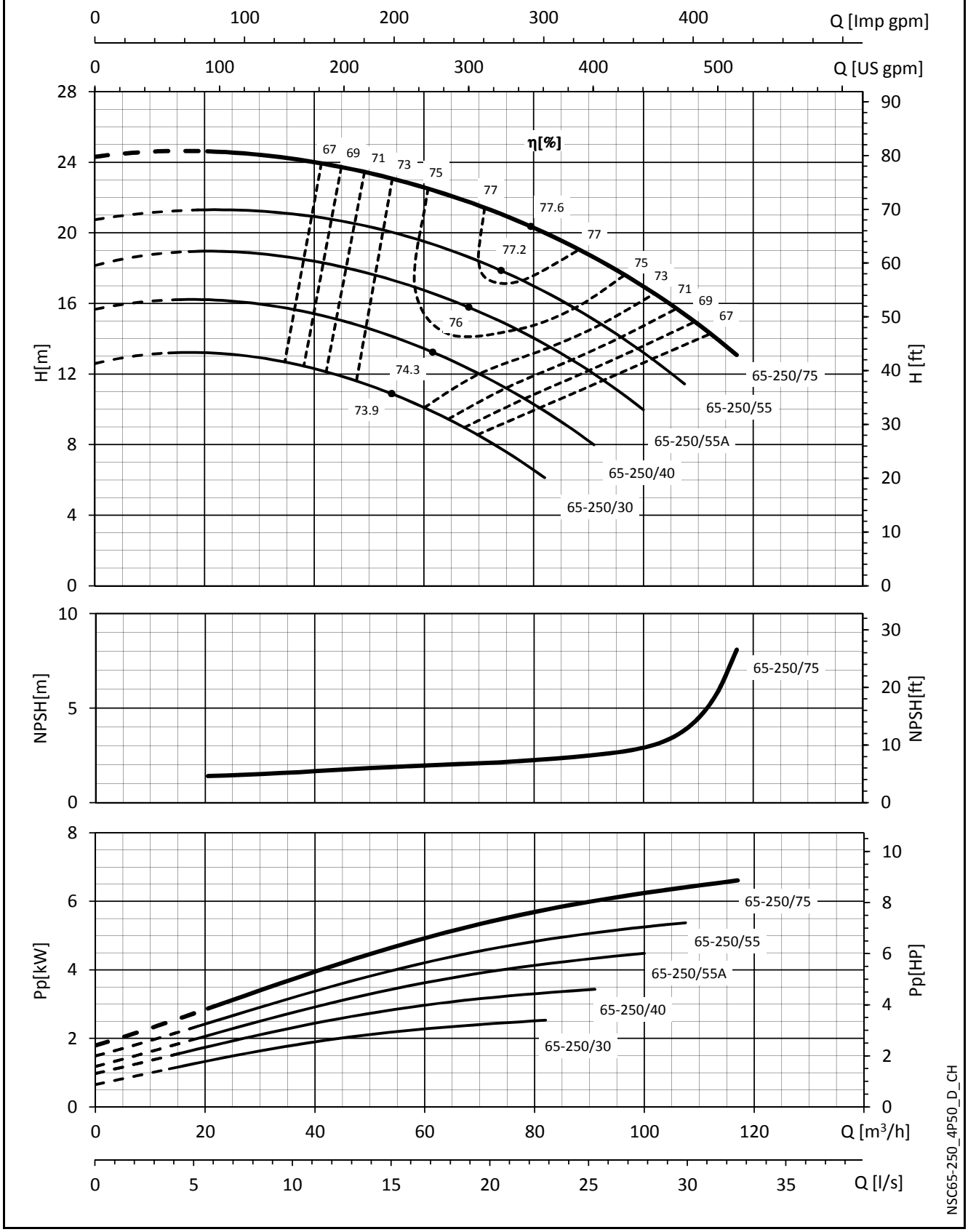

The NPSH values are laboratory values; for practical use we suggest increasing these values by 0,5 m.
These performances are valid for liquids with density ρ = 1,0 Kg/dm³ and kinematic viscosity ν = 1 mm²/sec.

LOWARA
a xylem brand

e-NSC SERIES
OPERATING CHARACTERISTICS AT 50 Hz, 4 POLES

NSC 65-315	~ 1450 [rpm]	ISO 9906:2012 - Grade 3B

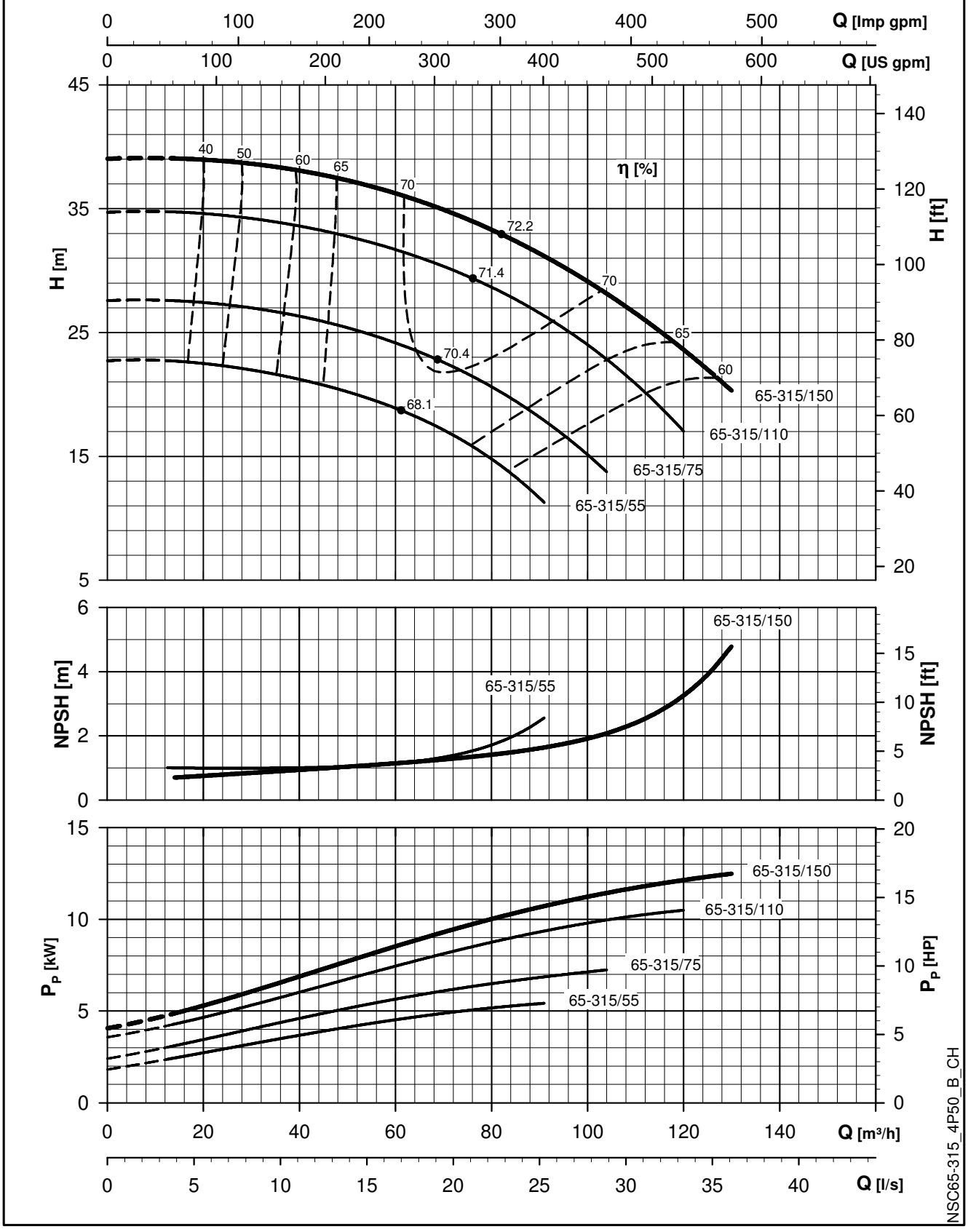

The NPSH values are laboratory values; for practical use we suggest increasing these values by 0,5 m.
These performances are valid for liquids with density ρ = 1,0 Kg/dm³ and kinematic viscosity ν = 1 mm²/sec.

LOWARA
a xylem brand

e-NSC SERIES
OPERATING CHARACTERISTICS AT 50 Hz, 4 POLES

NSC 80-160	~ 1450 [rpm]	ISO 9906:2012 - Grade 3B

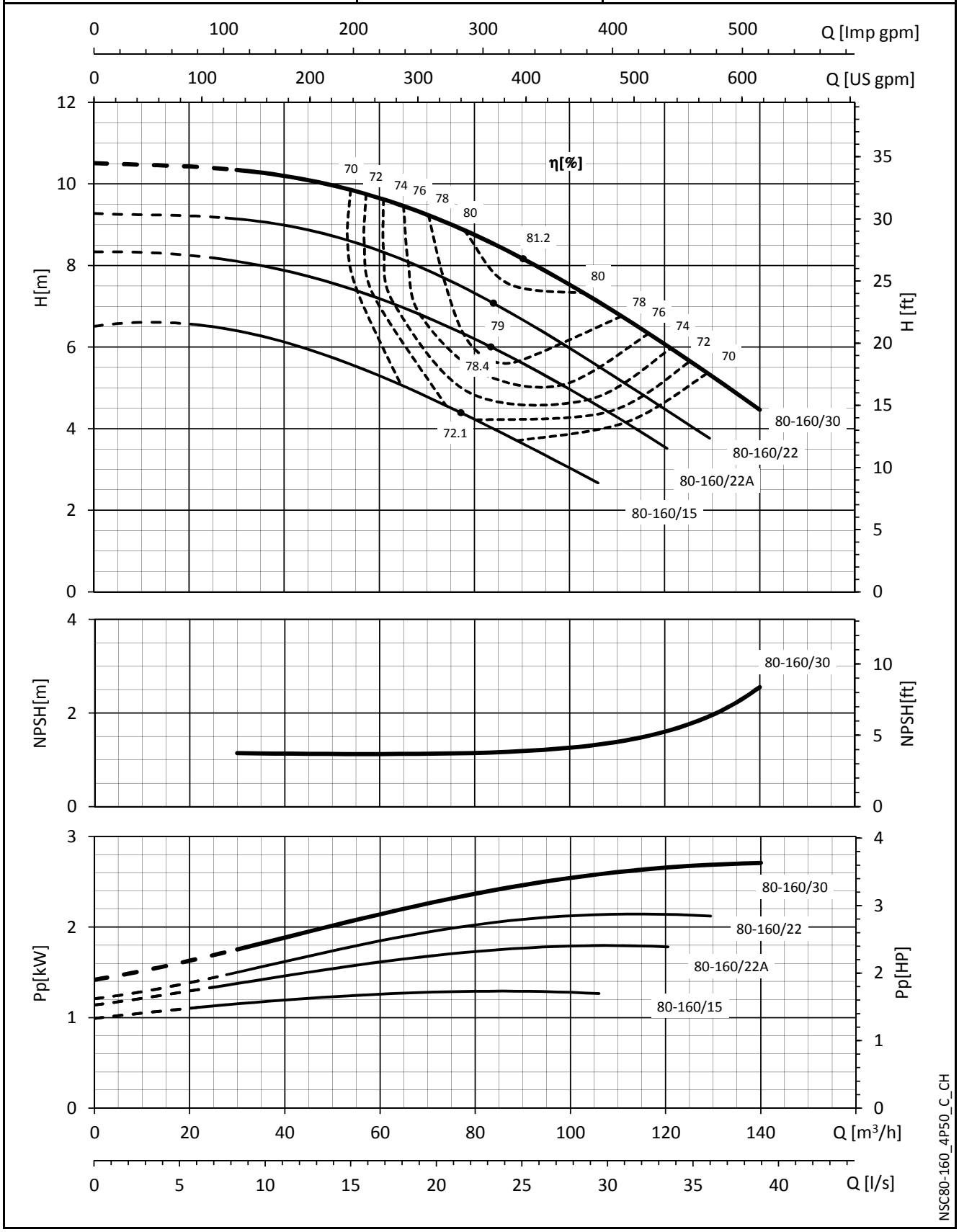

The NPSH values are laboratory values; for practical use we suggest increasing these values by 0,5 m.
These performances are valid for liquids with density ρ = 1,0 Kg/dm³ and kinematic viscosity ν = 1 mm²/sec.

LOWARA
a xylem brand

e-NSC SERIES
OPERATING CHARACTERISTICS AT 50 Hz, 4 POLES

NSC 80-200	~ 1450 [rpm]	ISO 9906:2012 - Grade 3B

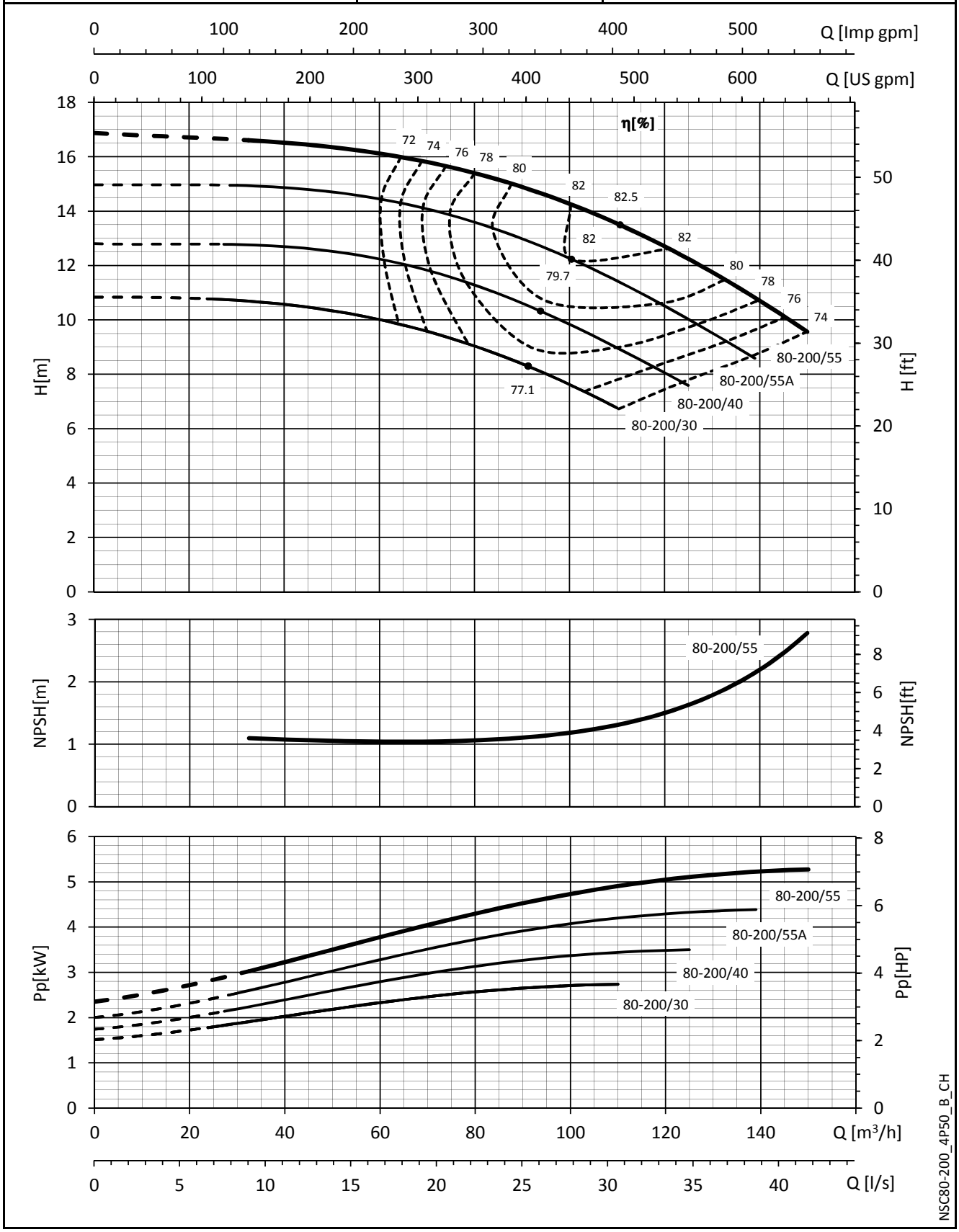

The NPSH values are laboratory values; for practical use we suggest increasing these values by 0,5 m.
These performances are valid for liquids with density ρ = 1,0 Kg/dm³ and kinematic viscosity ν = 1 mm²/sec.

LOWARA
a xylem brand

e-NSC SERIES
OPERATING CHARACTERISTICS AT 50 Hz, 4 POLES

NSC 80-250	~ 1450 [rpm]	ISO 9906:2012 - Grade 3B

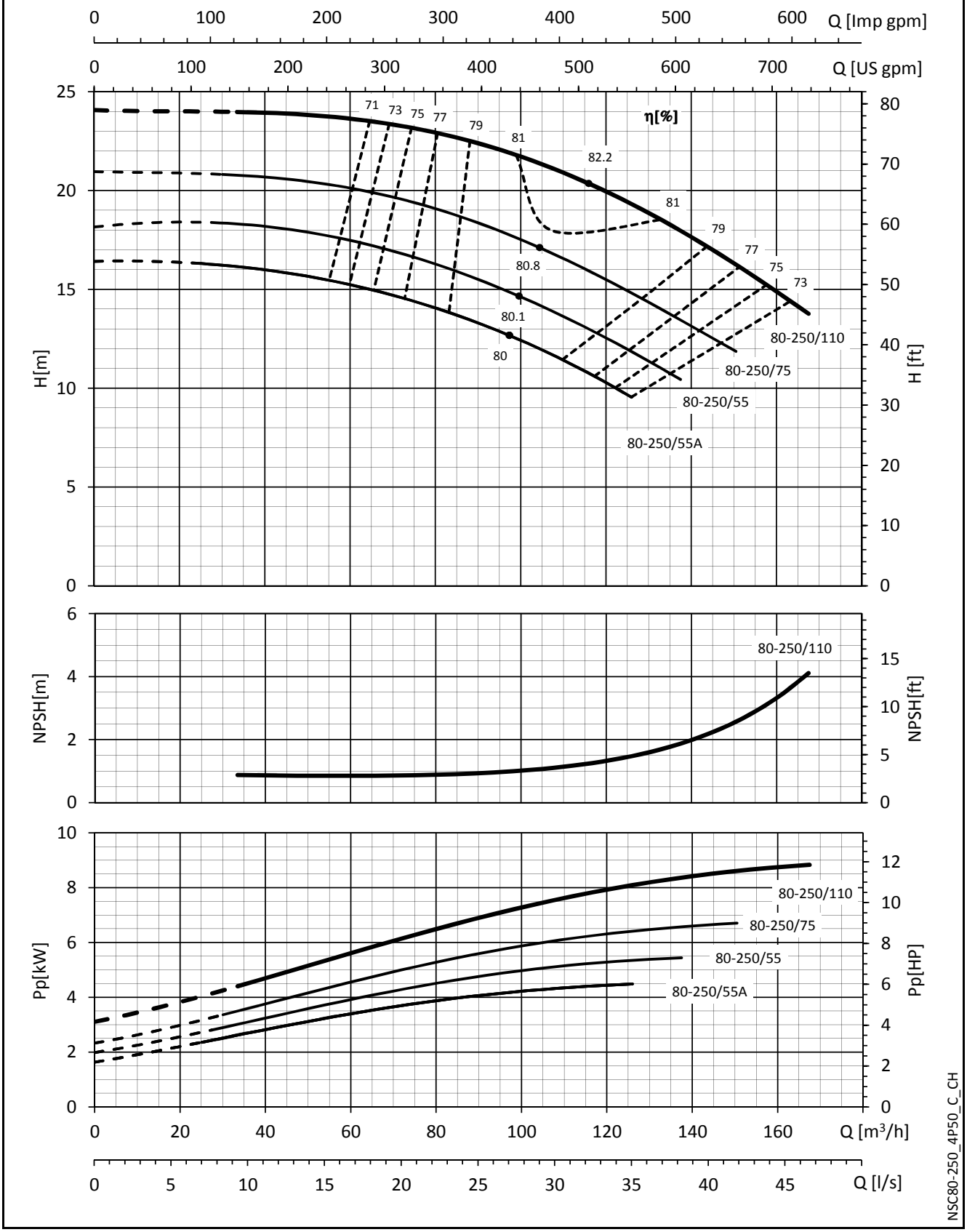

The NPSH values are laboratory values; for practical use we suggest increasing these values by 0,5 m.
These performances are valid for liquids with density ρ = 1,0 Kg/dm³ and kinematic viscosity ν = 1 mm²/sec.

LOWARA
a xylem brand

e-NSC SERIES
OPERATING CHARACTERISTICS AT 50 Hz, 4 POLES

NSC 80-315	~ 1450 [rpm]	ISO 9906:2012 - Grade 3B

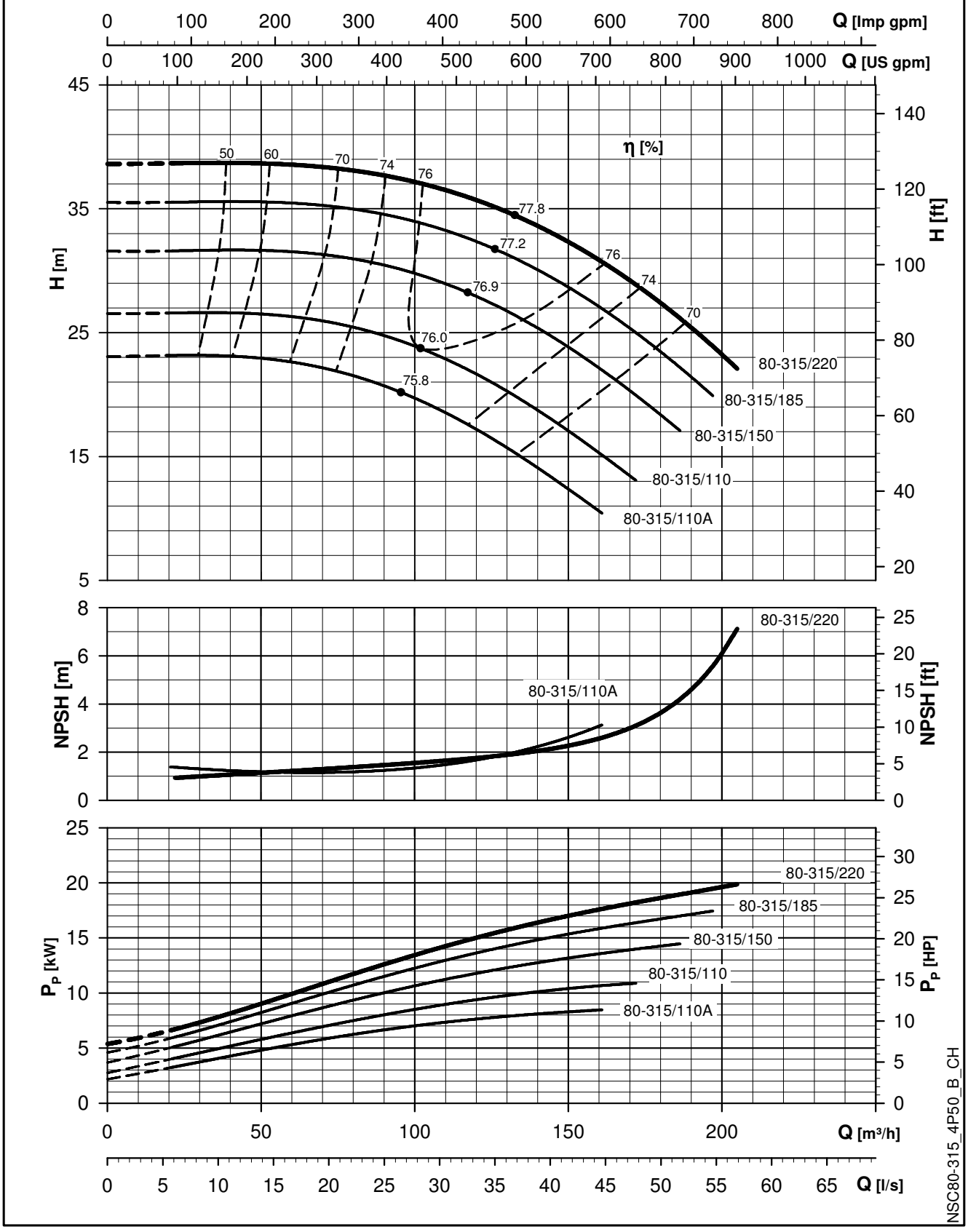

The NPSH values are laboratory values; for practical use we suggest increasing these values by 0,5 m.
These performances are valid for liquids with density $\rho = 1,0$ Kg/dm³ and kinematic viscosity $\nu = 1$ mm²/sec.

LOWARA
a xylem brand

e-NSC SERIES
OPERATING CHARACTERISTICS AT 50 Hz, 4 POLES

NSC 80-400	~ 1450 [rpm]	ISO 9906:2012 - Grade 3B

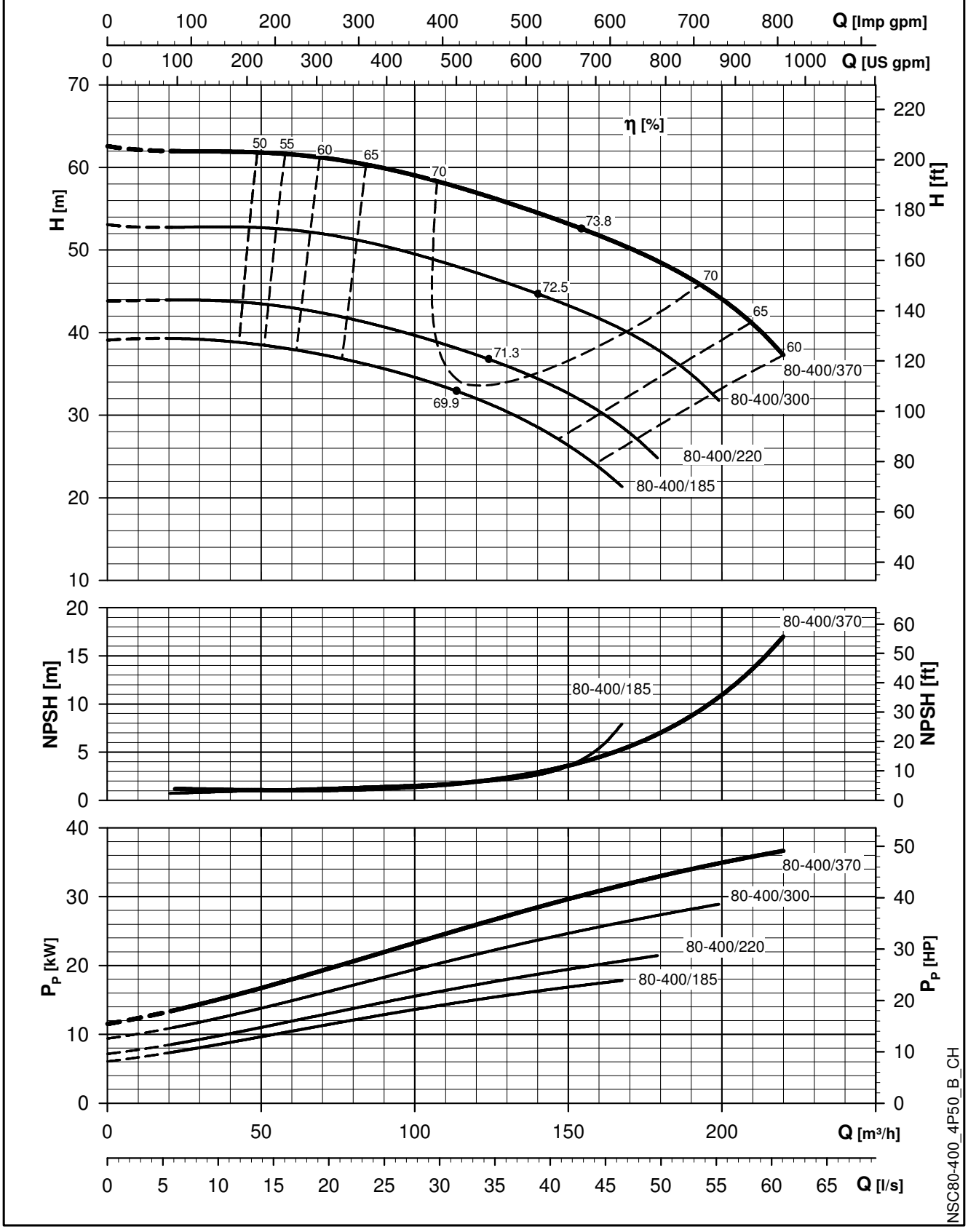

The NPSH values are laboratory values; for practical use we suggest increasing these values by 0,5 m.
These performances are valid for liquids with density $\rho = 1,0$ Kg/dm³ and kinematic viscosity $\nu = 1$ mm²/sec.

e-NSC SERIES
OPERATING CHARACTERISTICS AT 50 Hz, 4 POLES

NSC 100-160	~ 1450 [rpm]	ISO 9906:2012 - Grade 3B

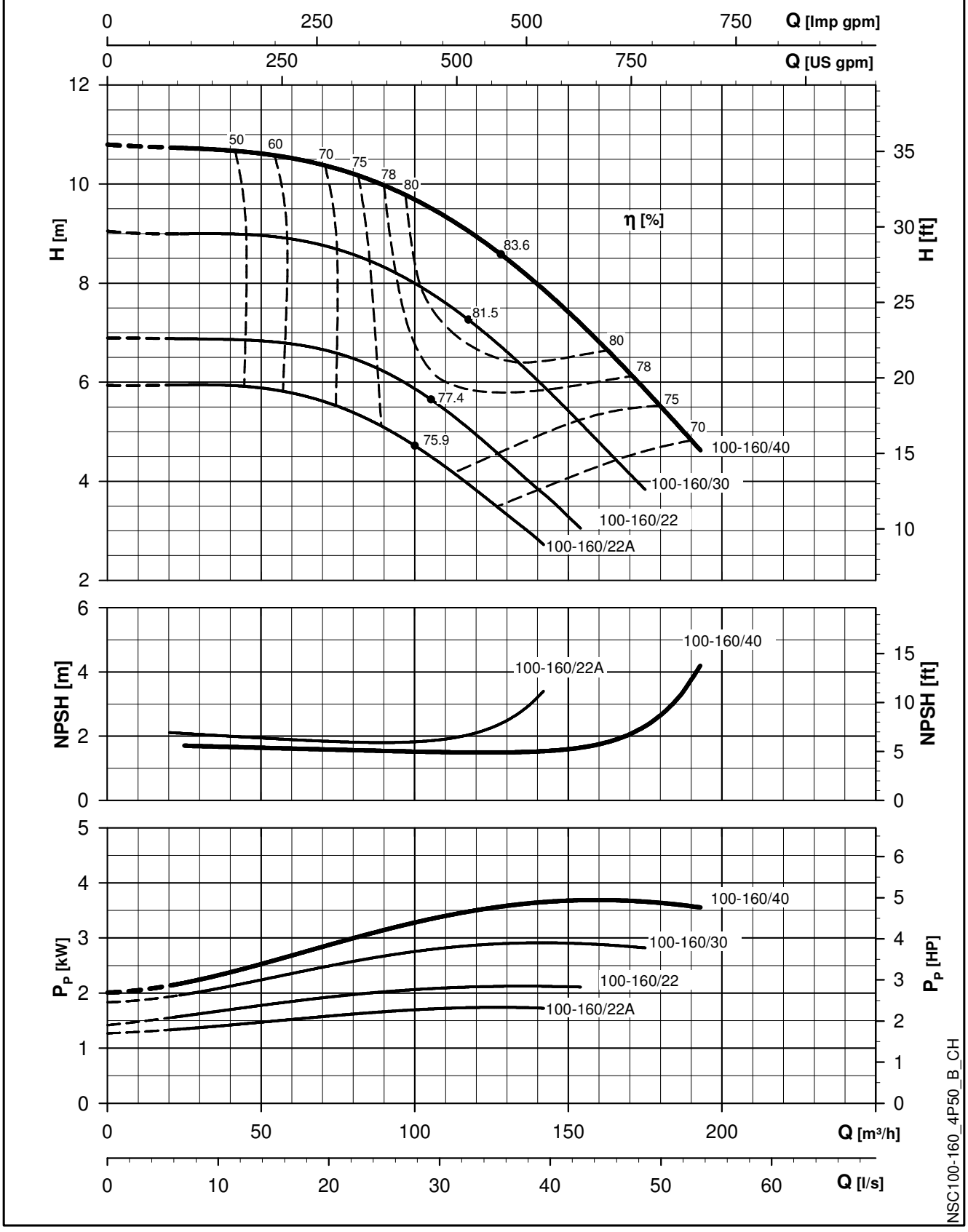

The NPSH values are laboratory values; for practical use we suggest increasing these values by 0,5 m.
These performances are valid for liquids with density ρ = 1,0 Kg/dm³ and kinematic viscosity ν = 1 mm²/sec.

LOWARA
a xylem brand

e-NSC SERIES
OPERATING CHARACTERISTICS AT 50 Hz, 4 POLES

NSC 100-200	~ 1450 [rpm]	ISO 9906:2012 - Grade 3B

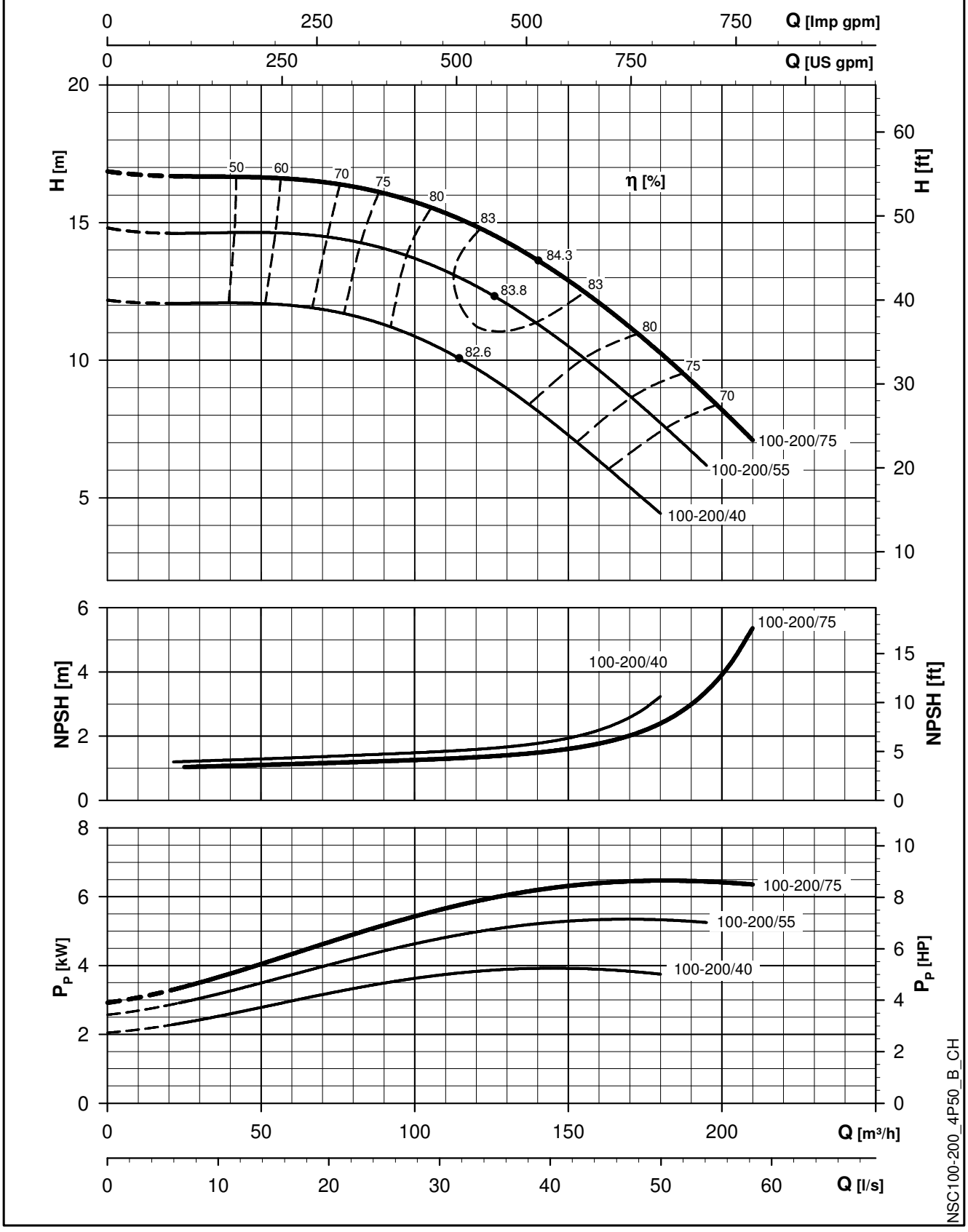

The NPSH values are laboratory values; for practical use we suggest increasing these values by 0,5 m.
These performances are valid for liquids with density ρ = 1,0 Kg/dm³ and kinematic viscosity ν = 1 mm²/sec.

LOWARA
a xylem brand

e-NSC SERIES
OPERATING CHARACTERISTICS AT 50 Hz, 4 POLES

NSC 100-250	~ 1450 [rpm]	ISO 9906:2012 - Grade 3B

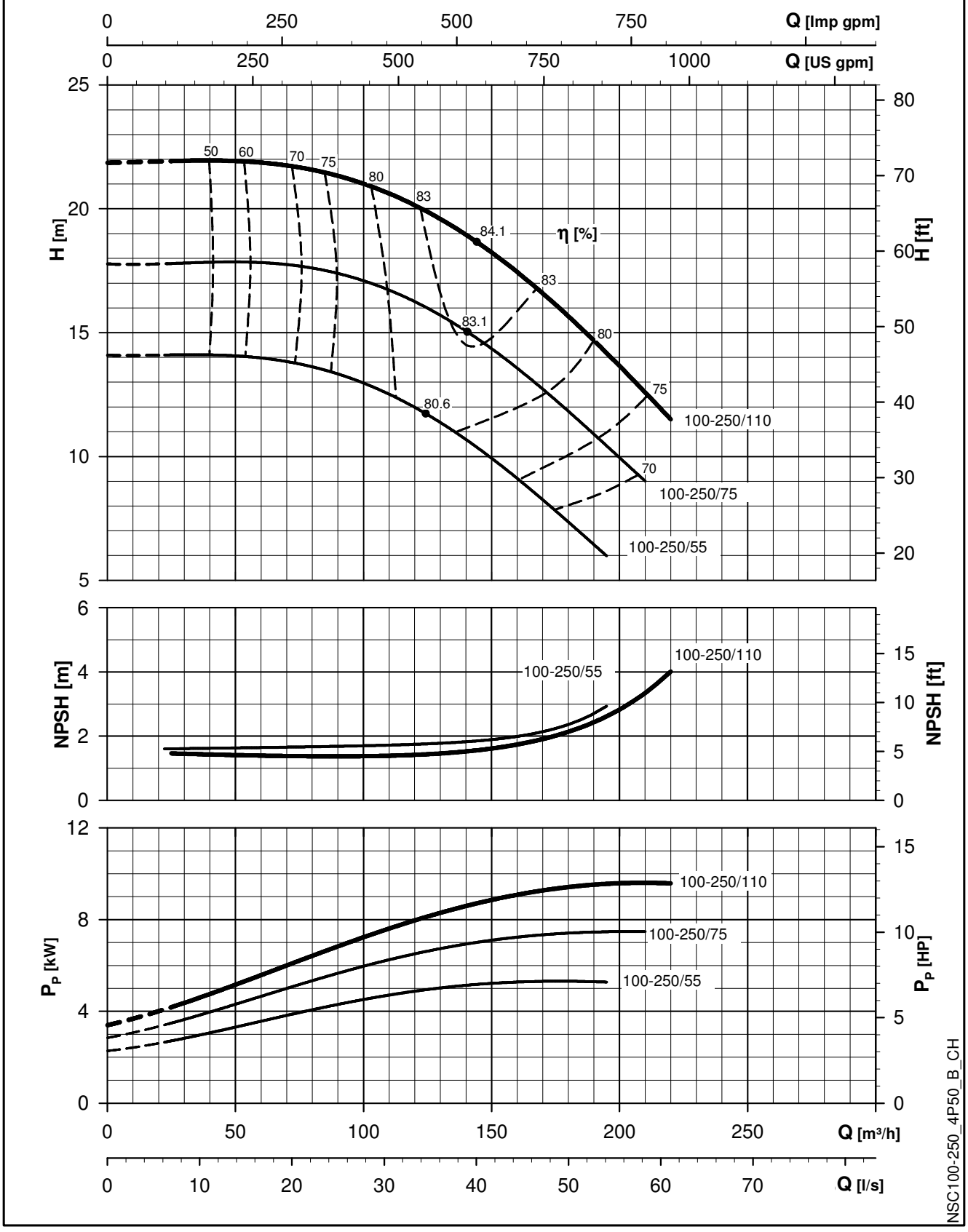

The NPSH values are laboratory values; for practical use we suggest increasing these values by 0,5 m.
These performances are valid for liquids with density ρ = 1,0 Kg/dm³ and kinematic viscosity ν = 1 mm²/sec.

LOWARA
a xylem brand

e-NSC SERIES
OPERATING CHARACTERISTICS AT 50 Hz, 4 POLES

NSC 100-315	~ 1450 [rpm]	ISO 9906:2012 - Grade 3B

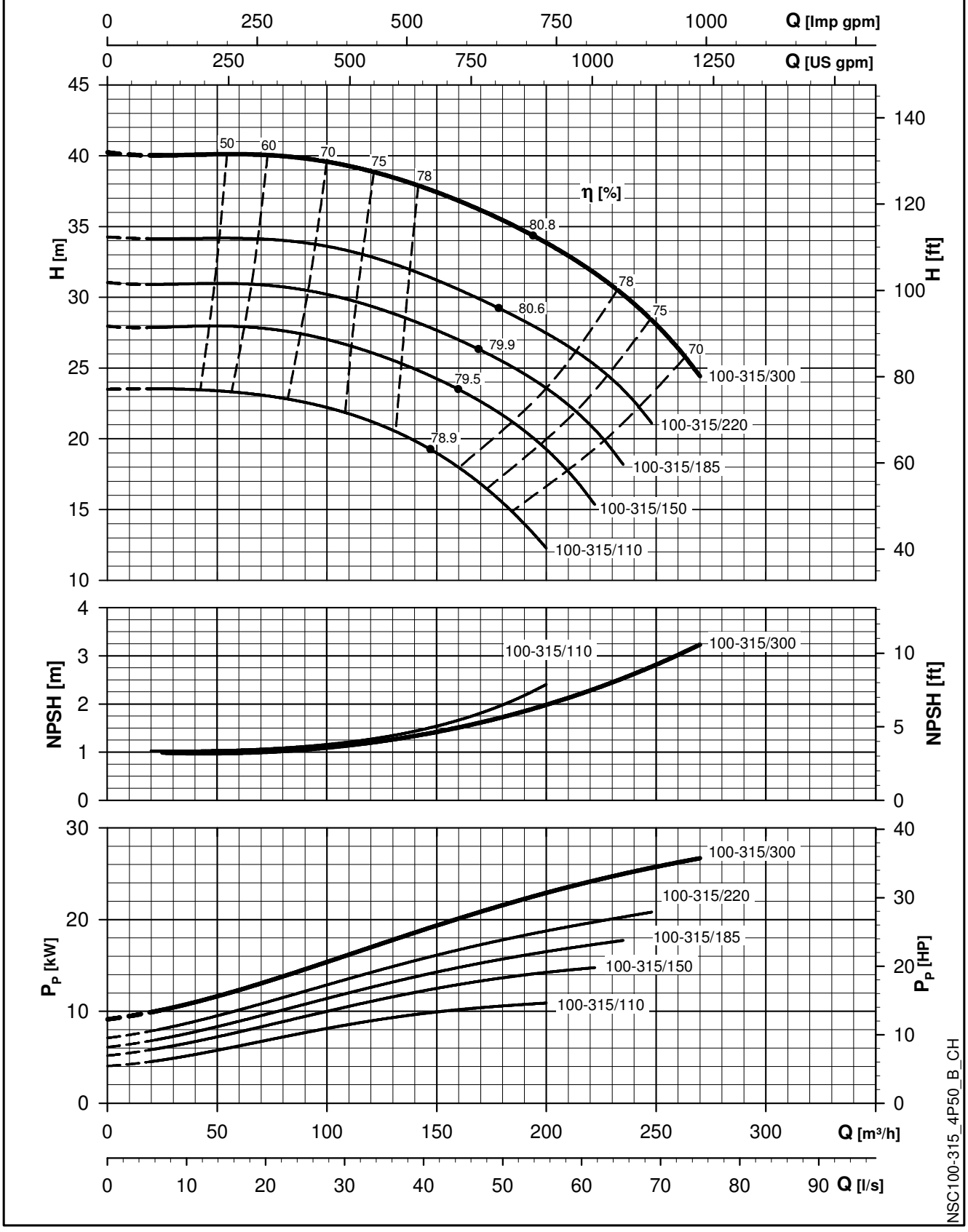

The NPSH values are laboratory values; for practical use we suggest increasing these values by 0,5 m.
These performances are valid for liquids with density $\rho = 1,0$ Kg/dm³ and kinematic viscosity $\nu = 1$ mm²/sec.

e-NSC SERIES
OPERATING CHARACTERISTICS AT 50 Hz, 4 POLES

NSC 100-400	~ 1450 [rpm]	ISO 9906:2012 - Grade 3B

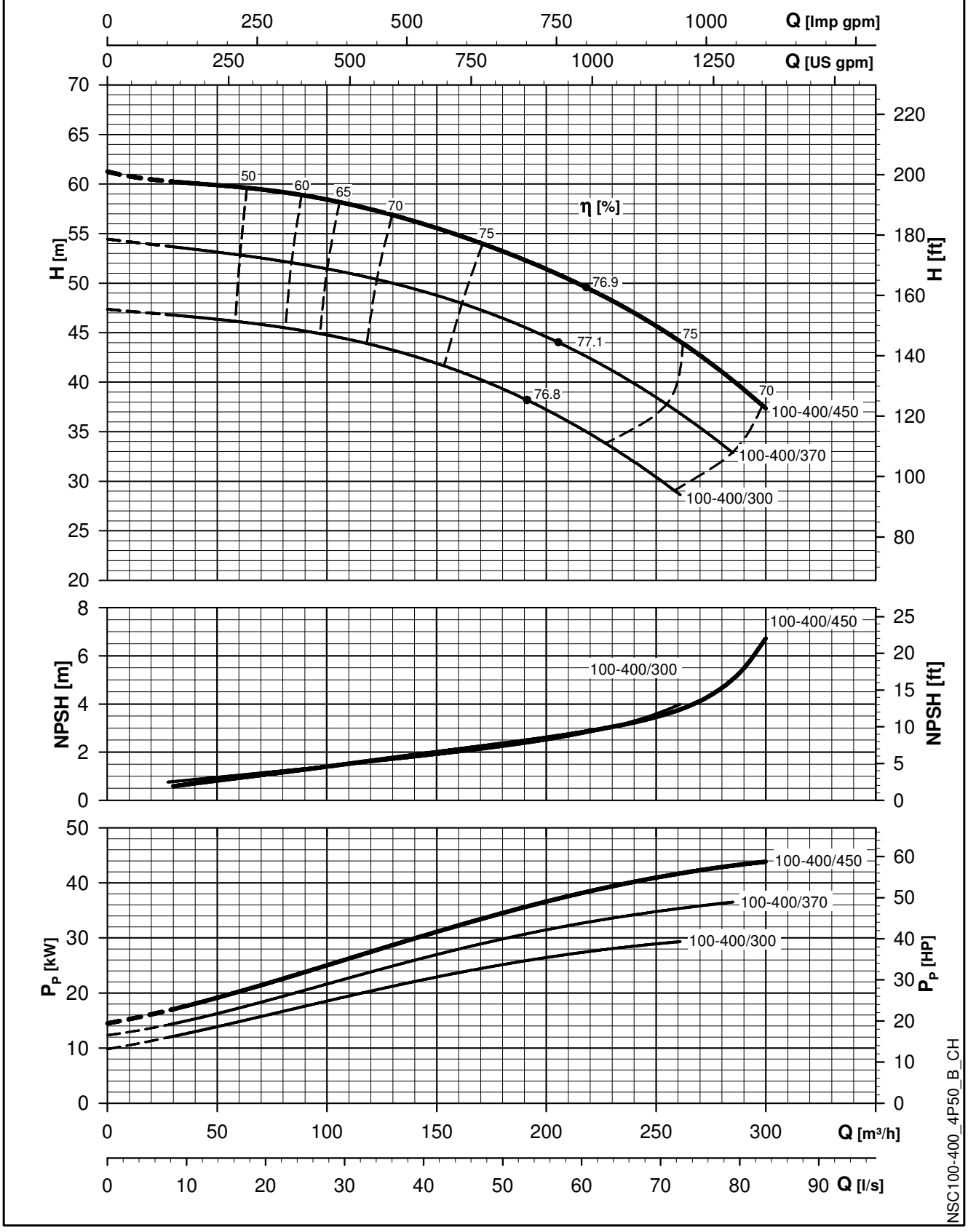

The NPSH values are laboratory values; for practical use we suggest increasing these values by 0,5 m.
These performances are valid for liquids with density $\rho = 1,0$ Kg/dm^3 and kinematic viscosity $\nu = 1$ mm^2/sec.

LOWARA
a xylem brand

e-NSC SERIES
OPERATING CHARACTERISTICS AT 50 Hz, 4 POLES

NSC 125-200	~ 1450 [rpm]	ISO 9906:2012 - Grade 3B

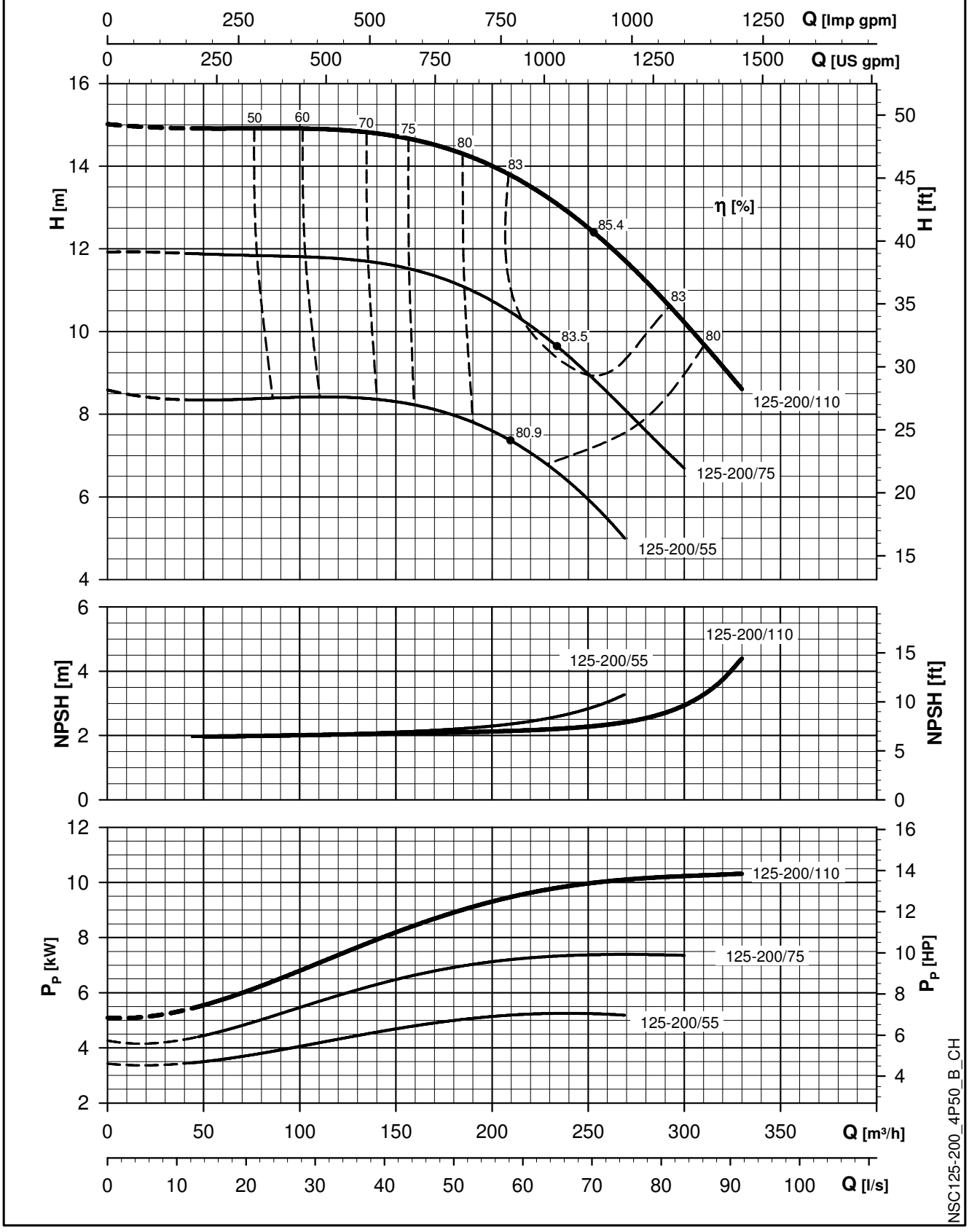

The NPSH values are laboratory values; for practical use we suggest increasing these values by 0,5 m.
These performances are valid for liquids with density $\rho = 1,0$ Kg/dm^3 and kinematic viscosity $\nu = 1$ mm^2/sec.

LOWARA
a xylem brand

e-NSC SERIES
OPERATING CHARACTERISTICS AT 50 Hz, 4 POLES

NSC 125-250	~ 1450 [rpm]	ISO 9906:2012 - Grade 3B

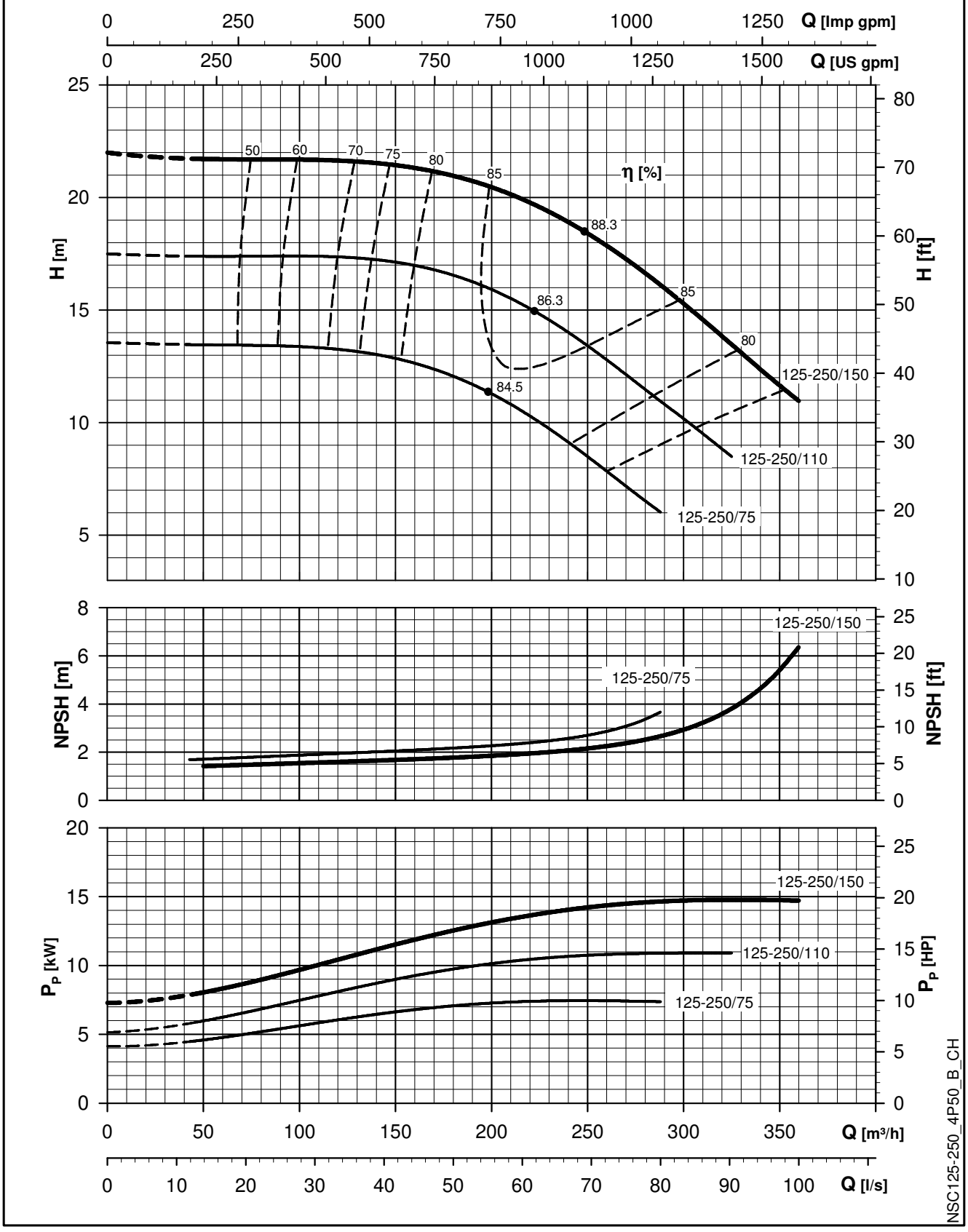

The NPSH values are laboratory values; for practical use we suggest increasing these values by 0,5 m.
These performances are valid for liquids with density ρ = 1,0 Kg/dm³ and kinematic viscosity ν = 1 mm²/sec.

LOWARA
a xylem brand

e-NSC SERIES
OPERATING CHARACTERISTICS AT 50 Hz, 4 POLES

NSC 125-315	~ 1450 [rpm]	ISO 9906:2012 - Grade 3B

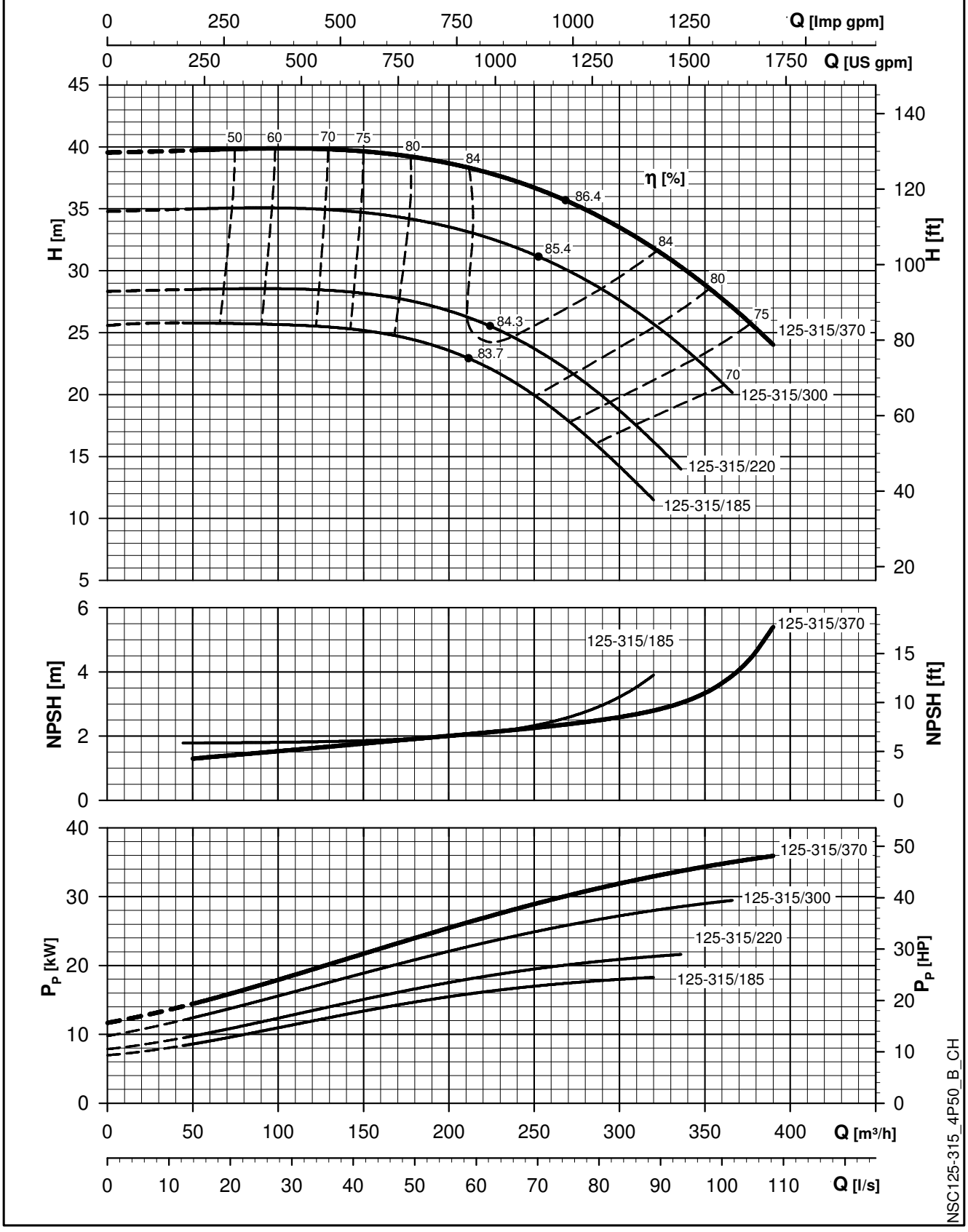

The NPSH values are laboratory values; for practical use we suggest increasing these values by 0,5 m.
These performances are valid for liquids with density ρ = 1,0 Kg/dm³ and kinematic viscosity ν = 1 mm²/sec.

e-NSC SERIES
OPERATING CHARACTERISTICS AT 50 Hz, 4 POLES

NSC 125-400	~ 1450 [rpm]	ISO 9906:2012 - Grade 3B

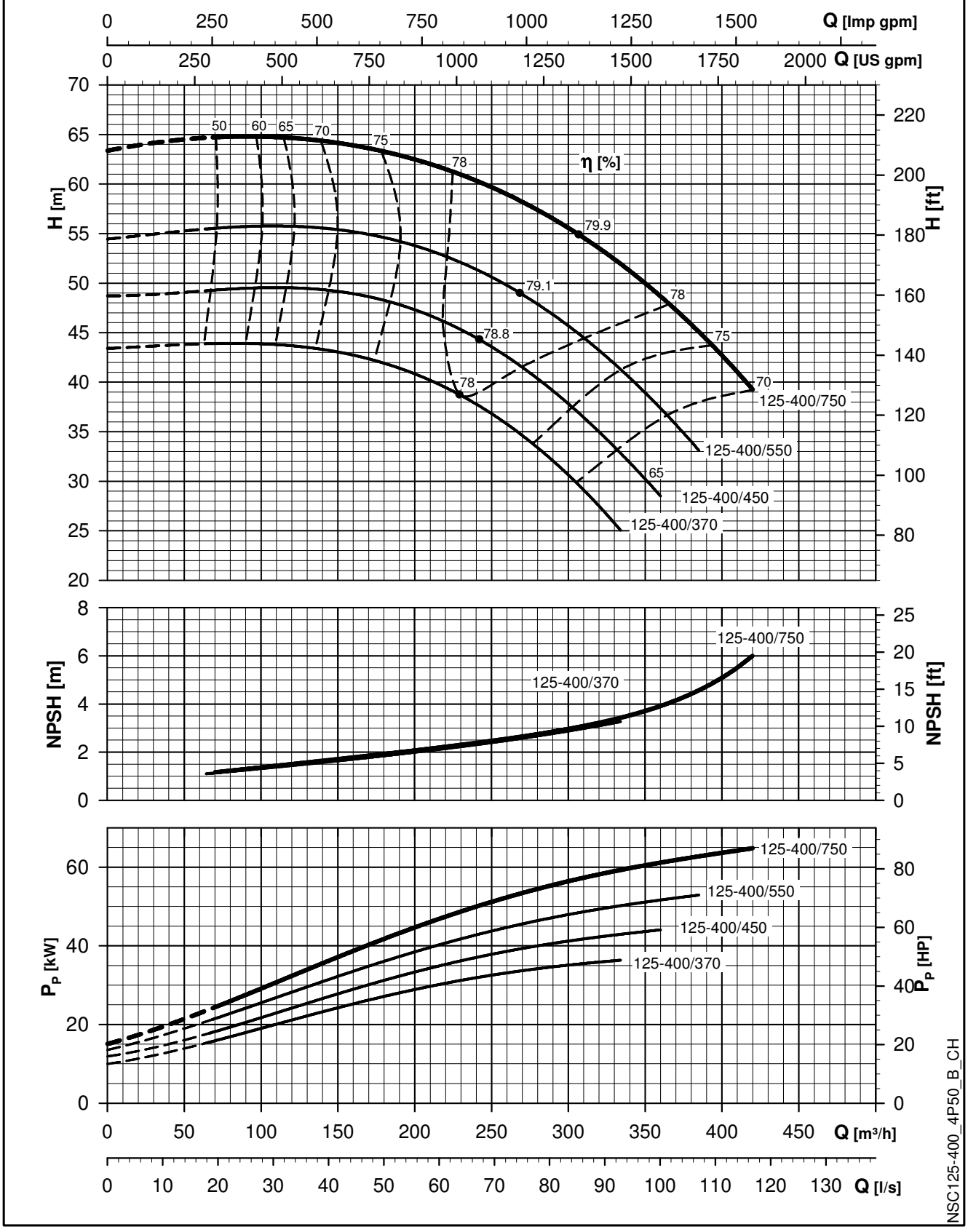

The NPSH values are laboratory values; for practical use we suggest increasing these values by 0,5 m.
These performances are valid for liquids with density ρ = 1,0 Kg/dm³ and kinematic viscosity ν = 1 mm²/sec.

LOWARA
a xylem brand

e-NSC SERIES
OPERATING CHARACTERISTICS AT 50 Hz, 4 POLES

NSC 150-200	~ 1450 [rpm]	ISO 9906:2012 - Grade 3B

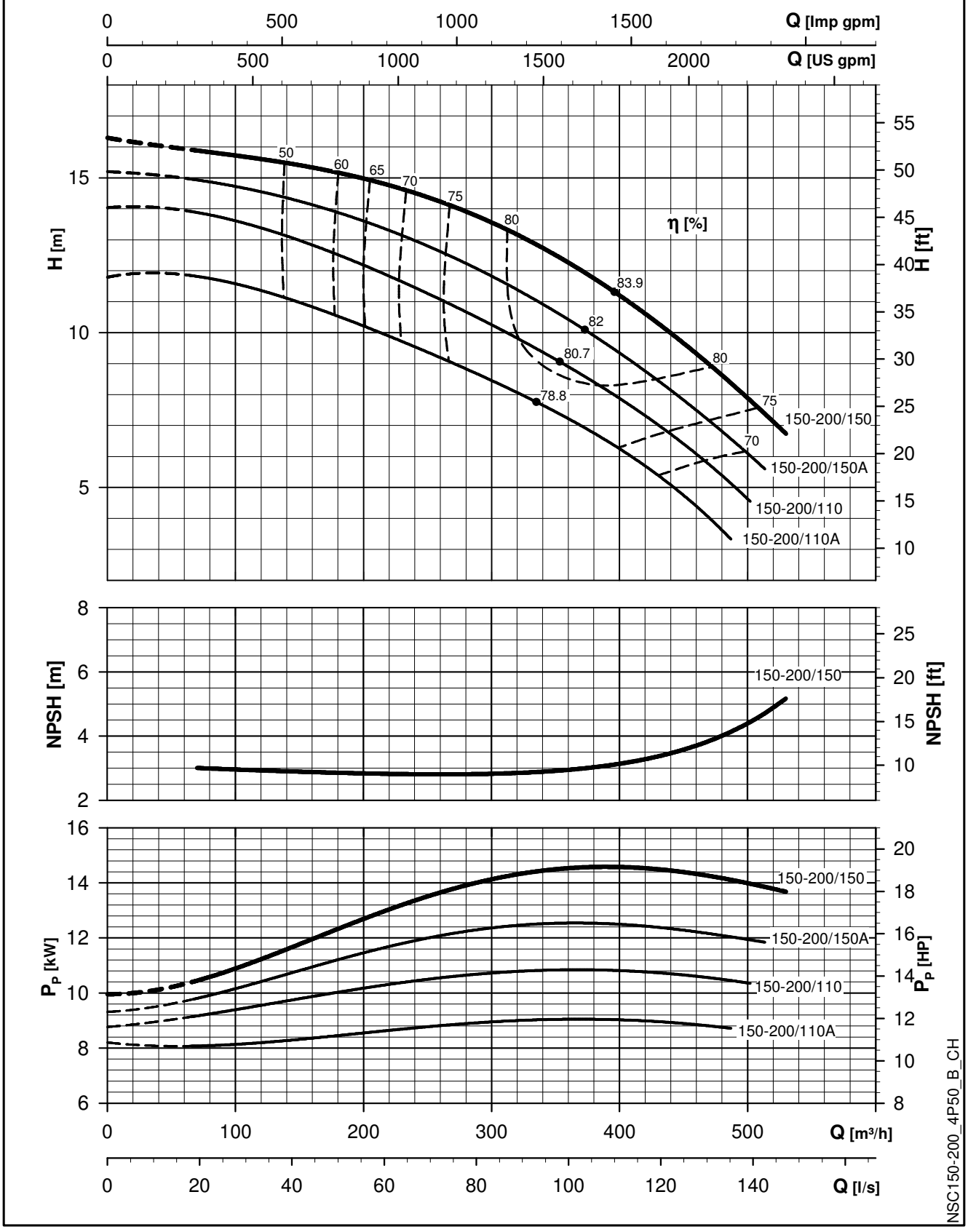

The NPSH values are laboratory values; for practical use we suggest increasing these values by 0,5 m.
These performances are valid for liquids with density ρ = 1,0 Kg/dm³ and kinematic viscosity ν = 1 mm²/sec.

LOWARA
a xylem brand

e-NSC SERIES
OPERATING CHARACTERISTICS AT 50 Hz, 4 POLES

NSC 150-250	~ 1450 [rpm]	ISO 9906:2012 - Grade 3B

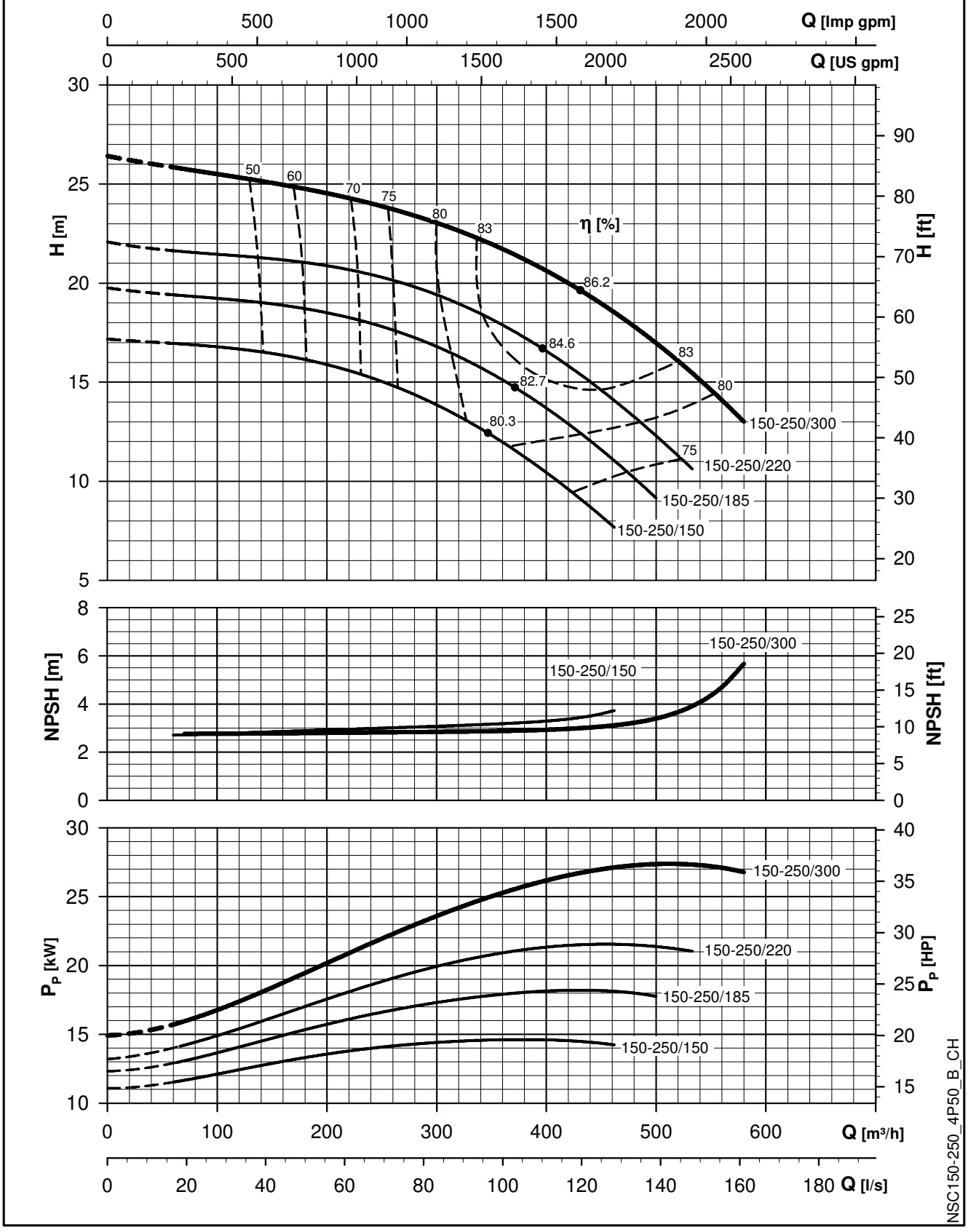

The NPSH values are laboratory values; for practical use we suggest increasing these values by 0,5 m.
These performances are valid for liquids with density ρ = 1,0 Kg/dm³ and kinematic viscosity ν = 1 mm²/sec.

LOWARA
a xylem brand

e-NSC SERIES
OPERATING CHARACTERISTICS AT 50 Hz, 4 POLES

NSC 150-315	~ 1450 [rpm]	ISO 9906:2012 - Grade 3B

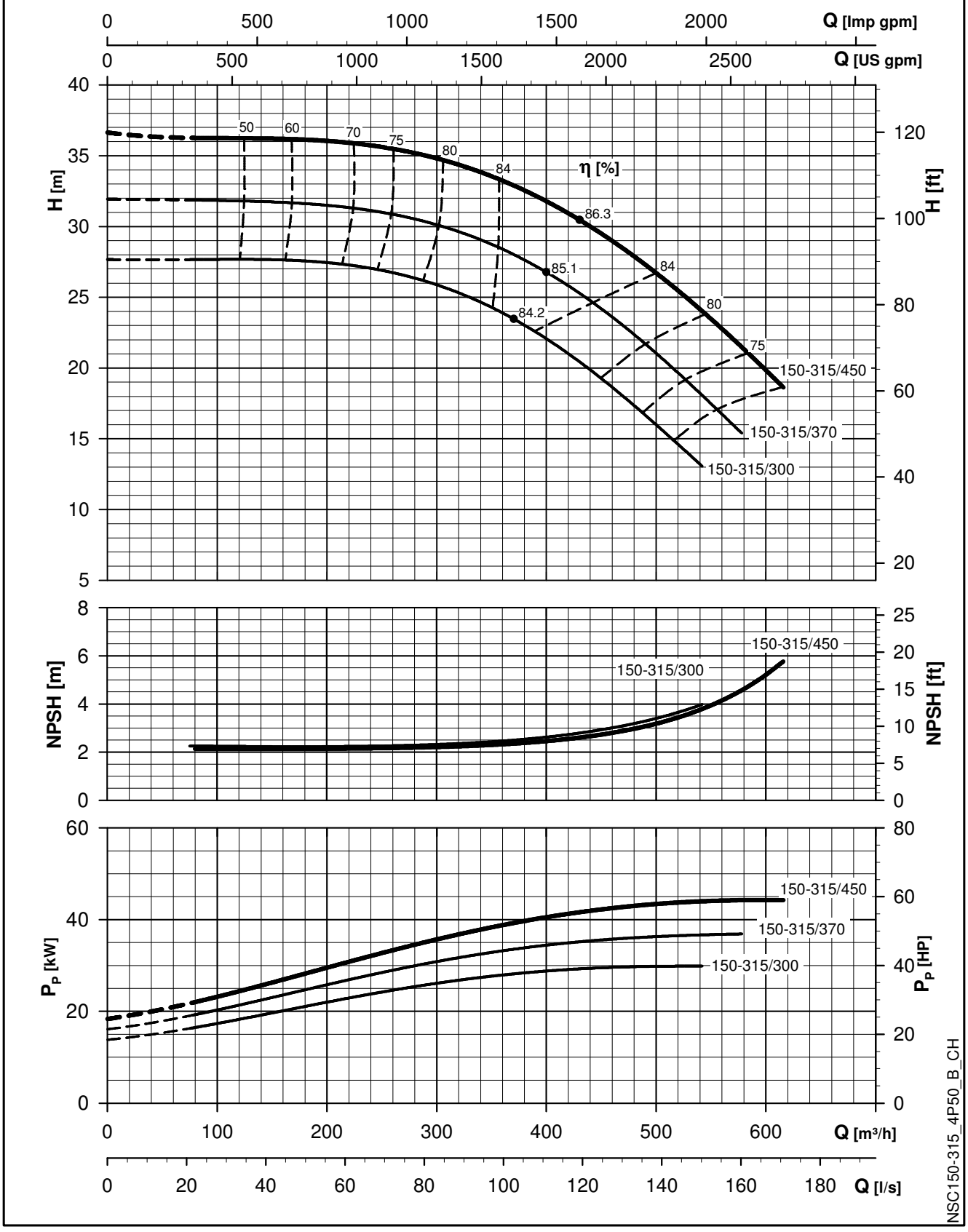

The NPSH values are laboratory values; for practical use we suggest increasing these values by 0,5 m.
These performances are valid for liquids with density $\rho = 1,0$ Kg/dm³ and kinematic viscosity $\nu = 1$ mm²/sec.

LOWARA
a xylem brand

e-NSC SERIES
OPERATING CHARACTERISTICS AT 50 Hz, 4 POLES

NSC 150-400	~ 1450 [rpm]	ISO 9906:2012 - Grade 3B

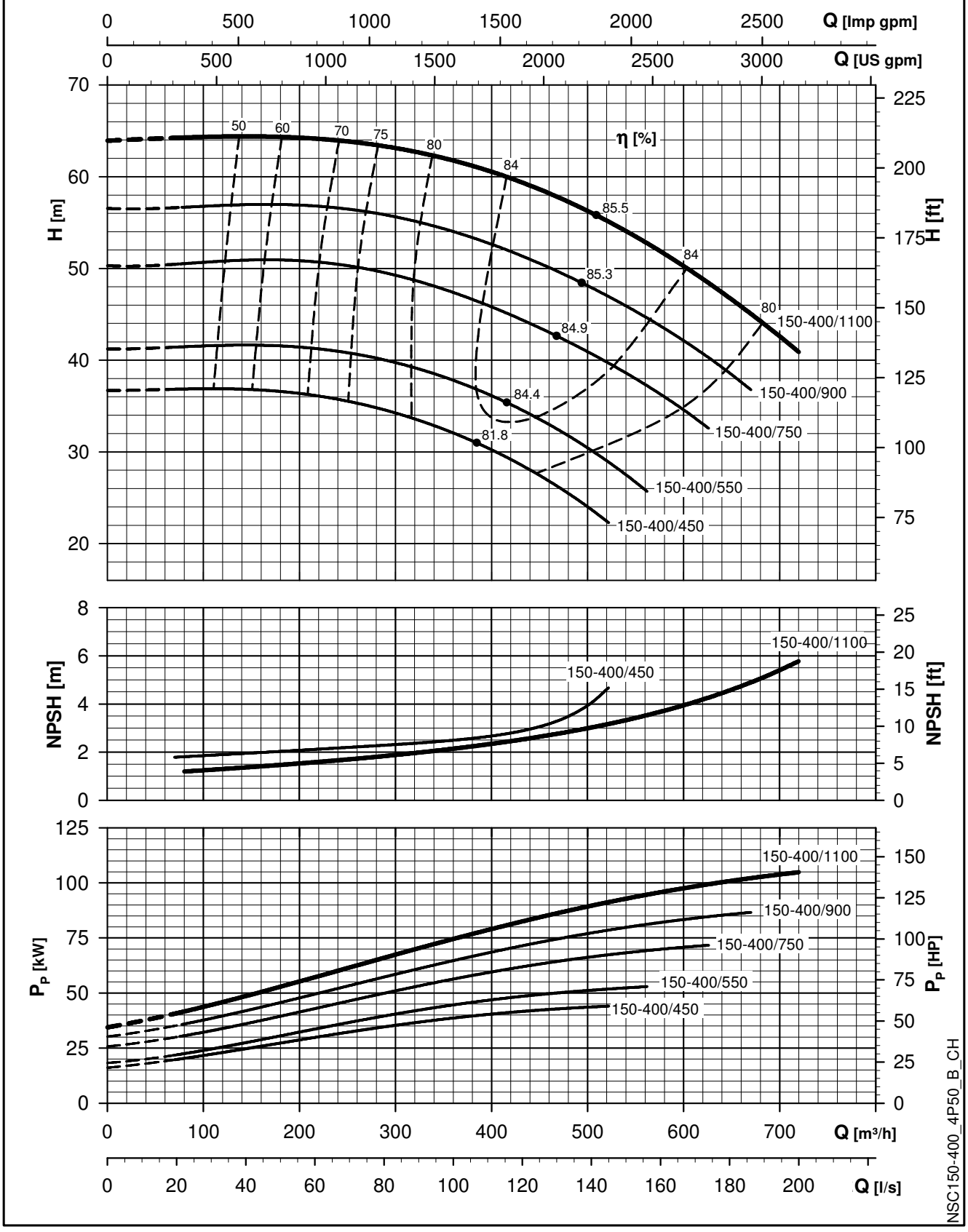

The NPSH values are laboratory values; for practical use we suggest increasing these values by 0,5 m.
These performances are valid for liquids with density ρ = 1,0 Kg/dm³ and kinematic viscosity ν = 1 mm²/sec.

e-NSC SERIES
OPERATING CHARACTERISTICS AT 50 Hz, 4 POLES

NSC 150-500	~ 1450 [rpm]	ISO 9906:2012 - Grade 3B

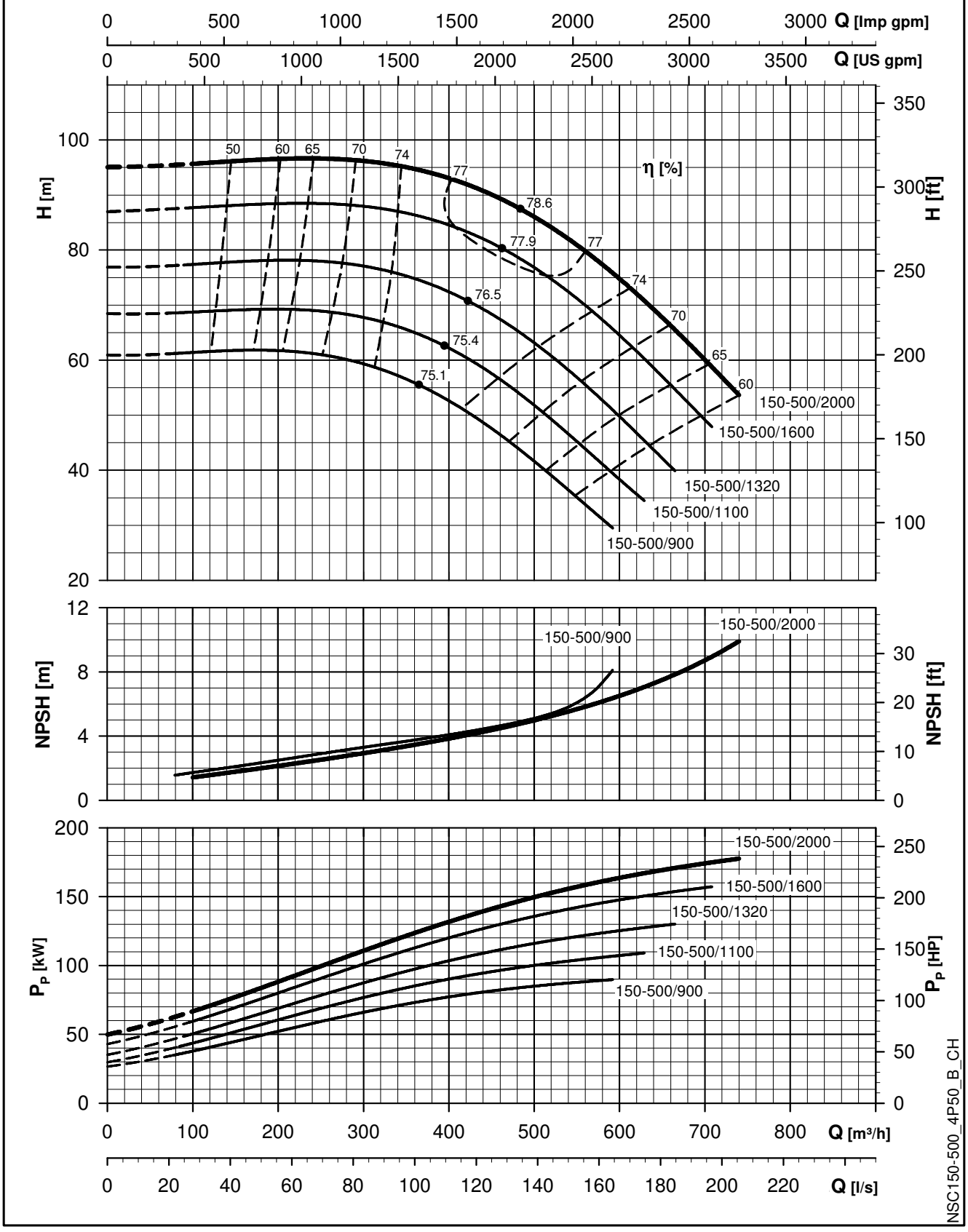

The NPSH values are laboratory values; for practical use we suggest increasing these values by 0,5 m.
These performances are valid for liquids with density ρ = 1,0 Kg/dm³ and kinematic viscosity ν = 1 mm²/sec.

e-NSC SERIES
OPERATING CHARACTERISTICS AT 50 Hz, 4 POLES

NSC 200-250	~ 1475 [rpm]	ISO 9906:2012 - Grade 3B

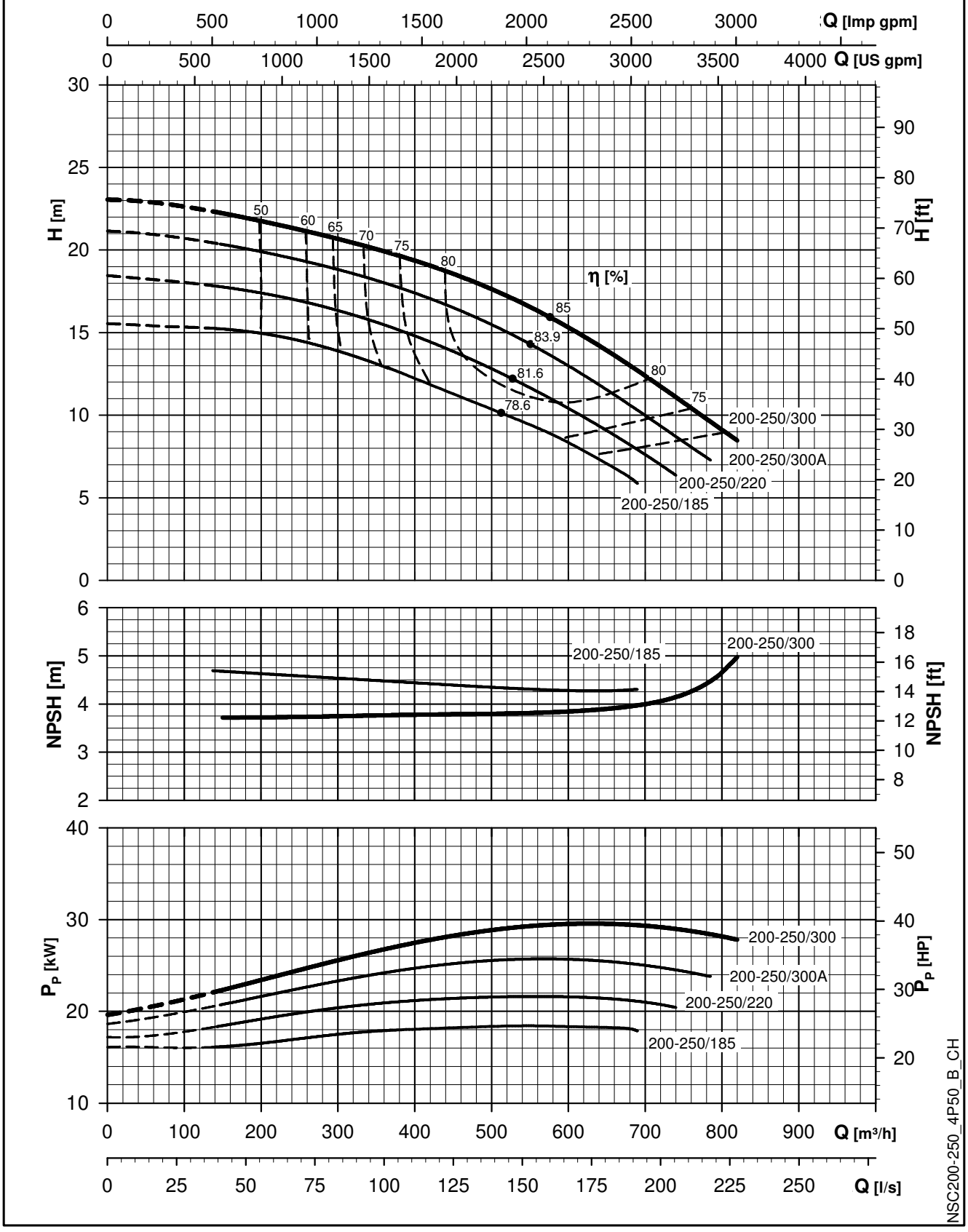

The NPSH values are laboratory values; for practical use we suggest increasing these values by 0,5 m.
These performances are valid for liquids with density $\rho = 1,0$ Kg/dm^3 and kinematic viscosity $\nu = 1$ mm^2/sec.

LOWARA
a xylem brand

e-NSC SERIES
OPERATING CHARACTERISTICS AT 50 Hz, 4 POLES

NSC 200-315	~ 1475 [rpm]	ISO 9906:2012 - Grade 3B

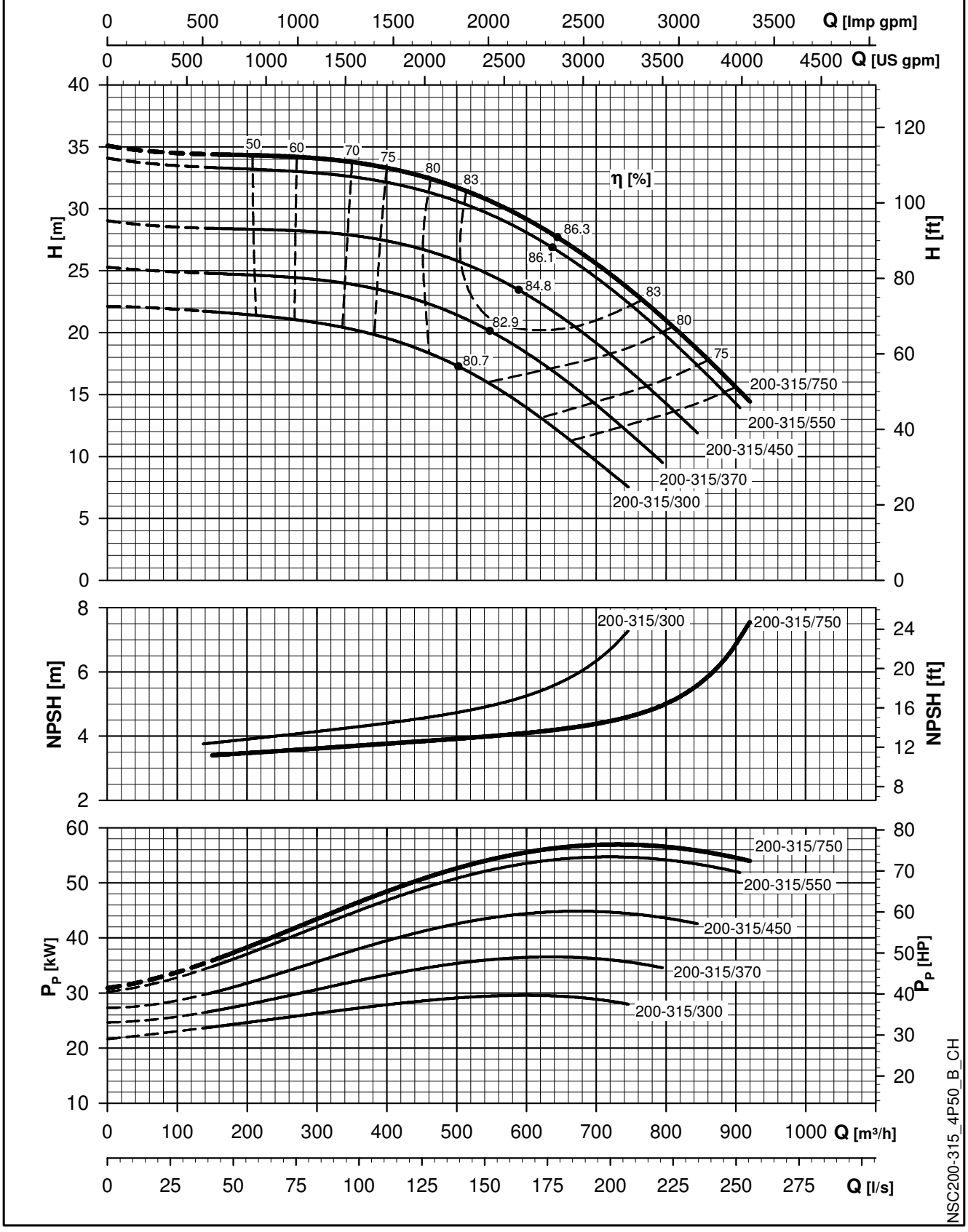

The NPSH values are laboratory values; for practical use we suggest increasing these values by 0,5 m.
These performances are valid for liquids with density $\rho = 1,0$ Kg/dm^3 and kinematic viscosity $\nu = 1$ mm^2/sec.

LOWARA
a xylem brand

e-NSC SERIES
OPERATING CHARACTERISTICS AT 50 Hz, 4 POLES

NSC 200-400	~ 1475 [rpm]	ISO 9906:2012 - Grade 3B

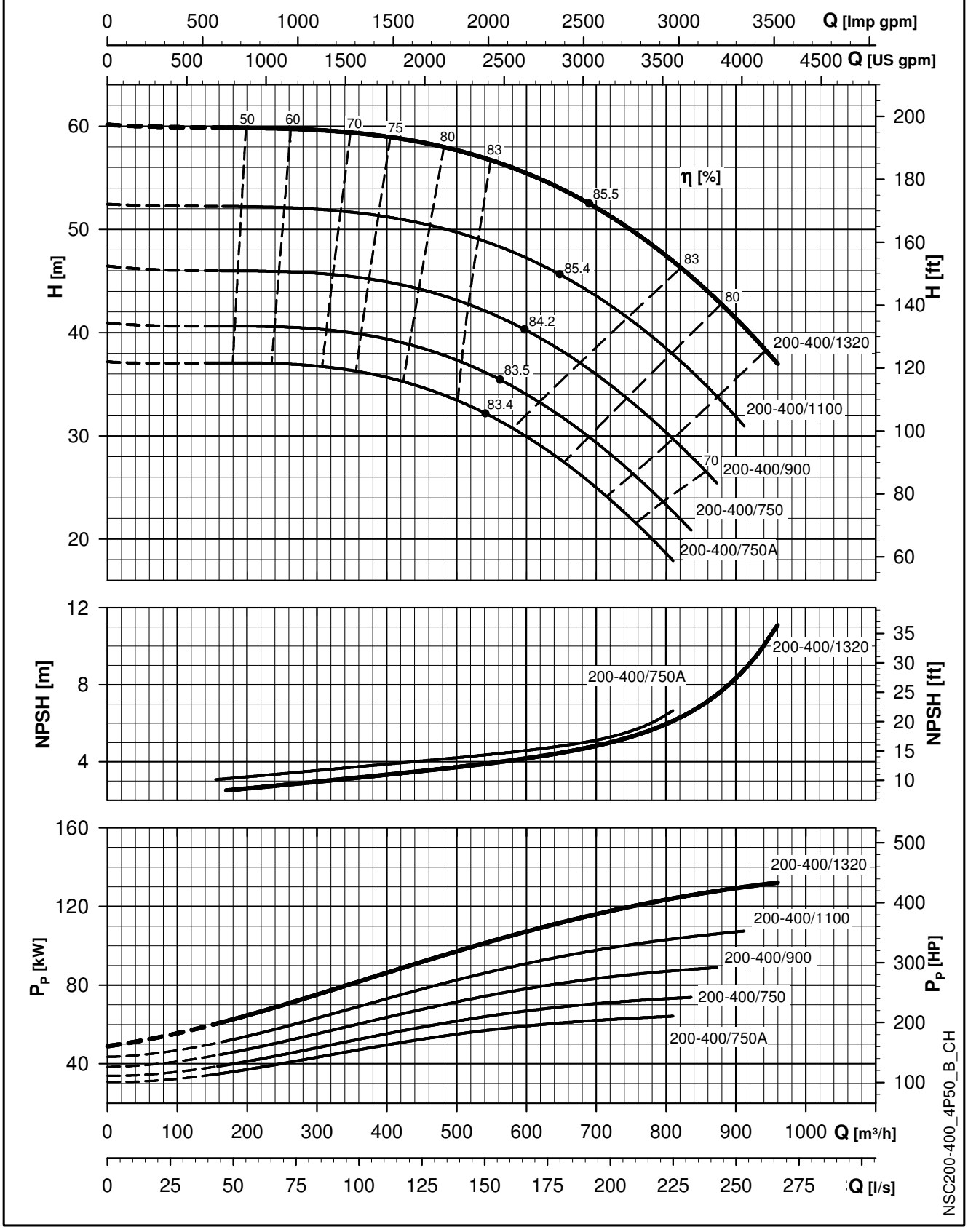

The NPSH values are laboratory values; for practical use we suggest increasing these values by 0,5 m.
These performances are valid for liquids with density $\rho = 1,0$ Kg/dm³ and kinematic viscosity $\nu = 1$ mm²/sec.

LOWARA
a xylem brand

e-NSC SERIES
OPERATING CHARACTERISTICS AT 50 Hz, 4 POLES

NSC 200-500	~ 1475 [rpm]	ISO 9906:2012 - Grade 3B

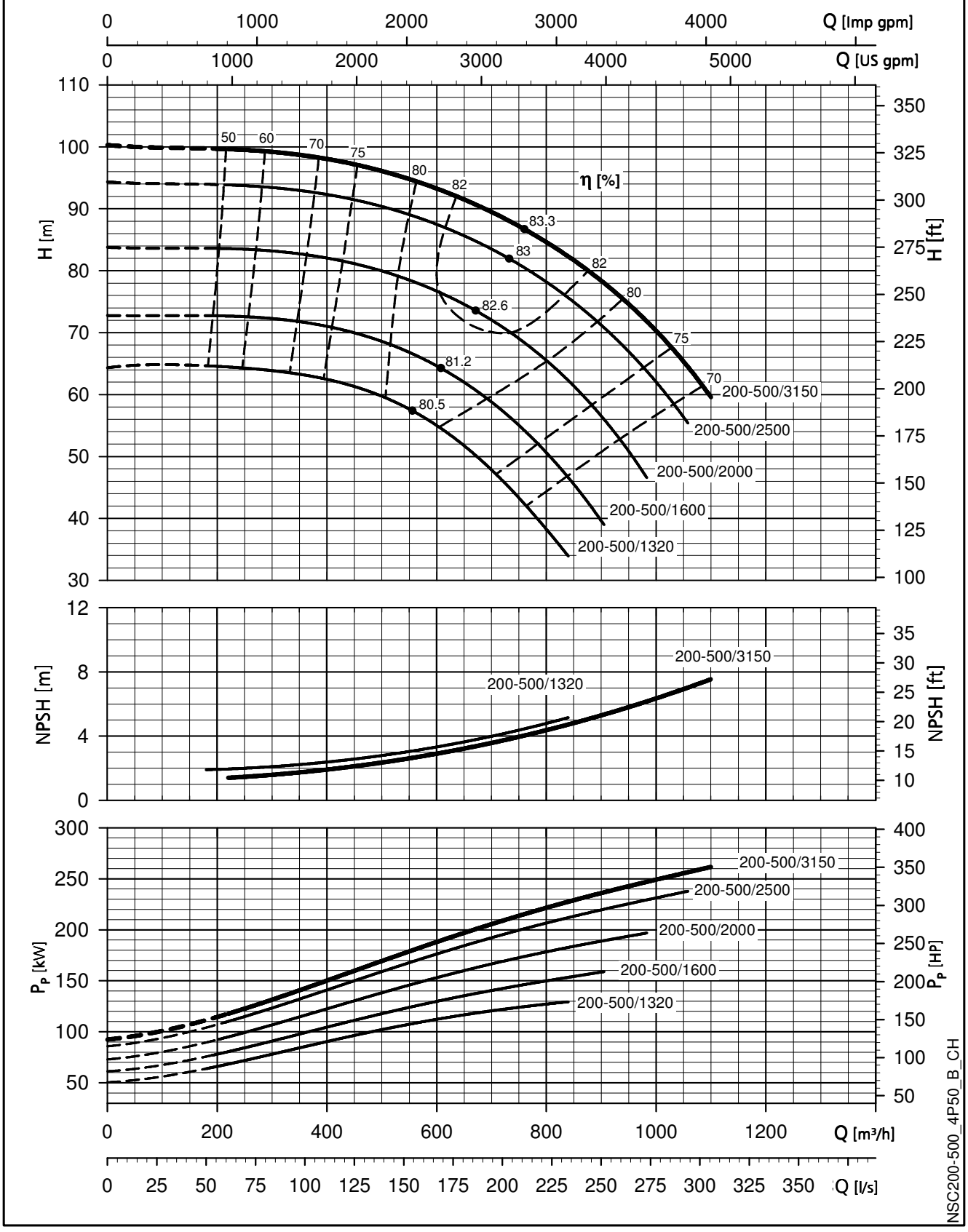

The NPSH values are laboratory values; for practical use we suggest increasing these values by 0,5 m.
These performances are valid for liquids with density ρ = 1,0 Kg/dm³ and kinematic viscosity ν = 1 mm²/sec.

LOWARA
a xylem brand

e-NSC SERIES
OPERATING CHARACTERISTICS AT 50 Hz, 4 POLES

NSC 250-315	~ 1475 [rpm]	ISO 9906:2012 - Grade 3B

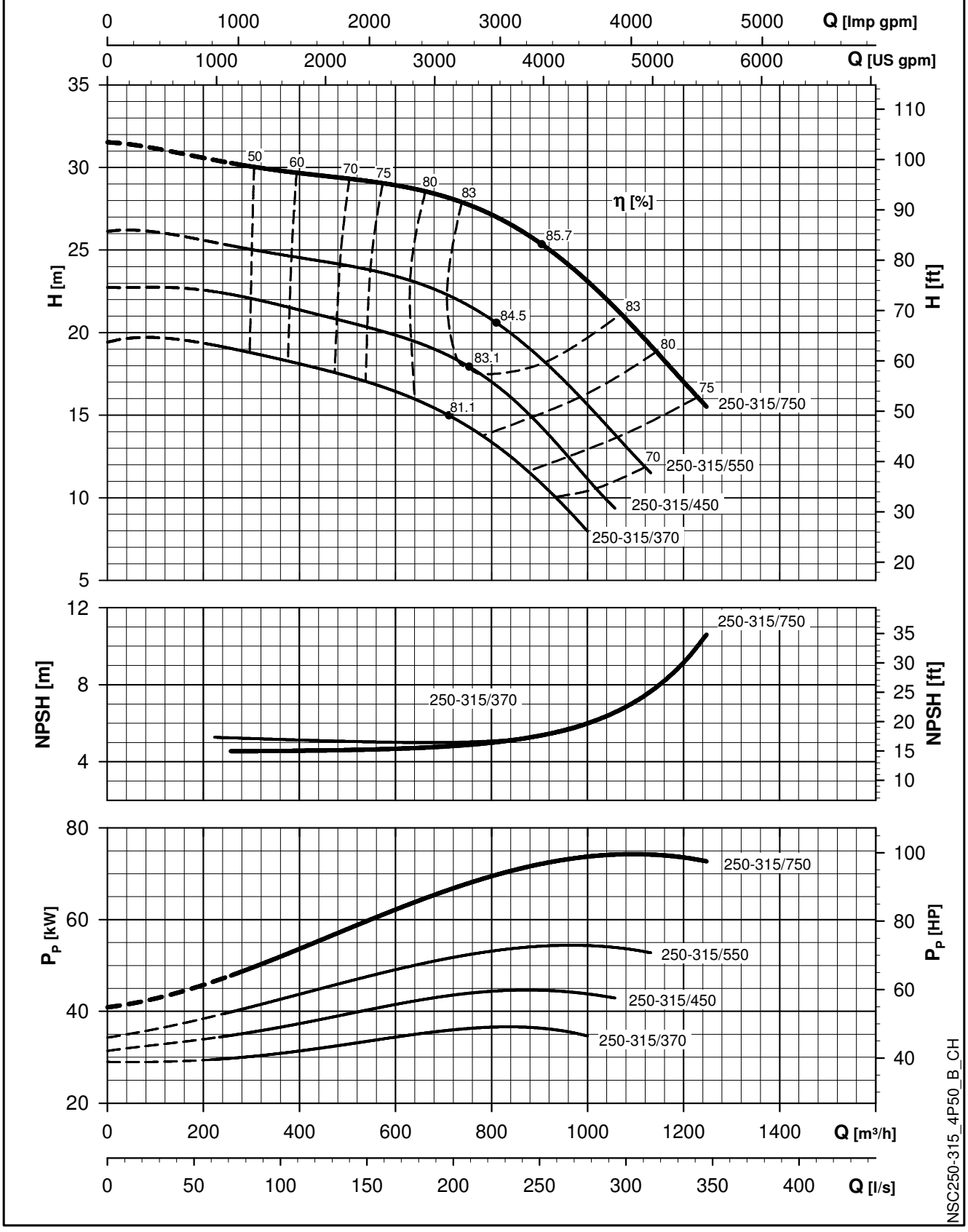

The NPSH values are laboratory values; for practical use we suggest increasing these values by 0,5 m.
These performances are valid for liquids with density $\rho = 1,0$ Kg/dm³ and kinematic viscosity $\nu = 1$ mm²/sec.

LOWARA
a xylem brand

e-NSC SERIES
OPERATING CHARACTERISTICS AT 50 Hz, 4 POLES

NSC 250-400	~ 1475 [rpm]	ISO 9906:2012 - Grade 3B

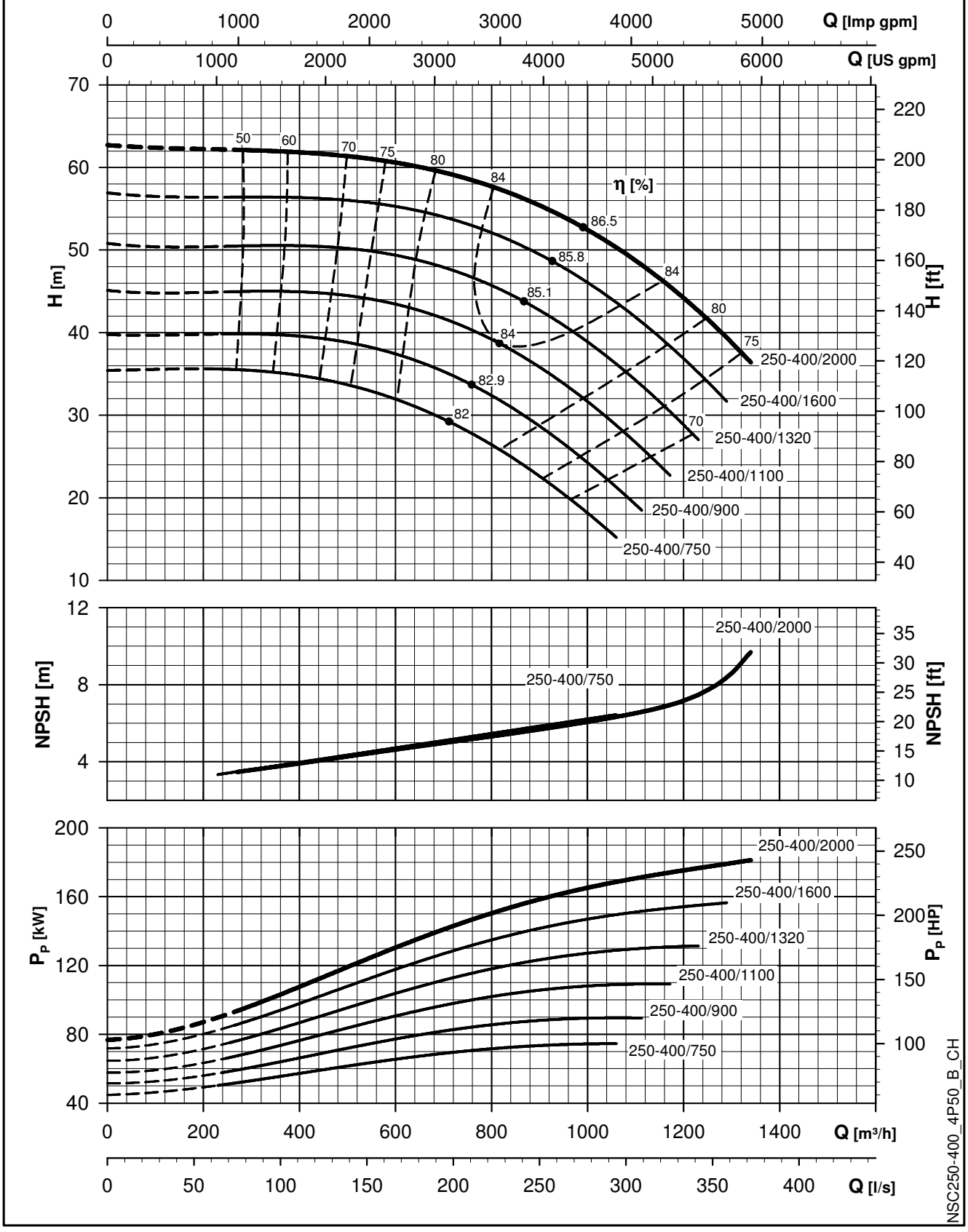

The NPSH values are laboratory values; for practical use we suggest increasing these values by 0,5 m.
These performances are valid for liquids with density $\rho = 1{,}0$ Kg/dm³ and kinematic viscosity $\nu = 1$ mm²/sec.

LOWARA
a xylem brand

e-NSC SERIES
OPERATING CHARACTERISTICS AT 50 Hz, 4 POLES

NSC 250-500	~ 1475 [rpm]	ISO 9906:2012 - Grade 3B

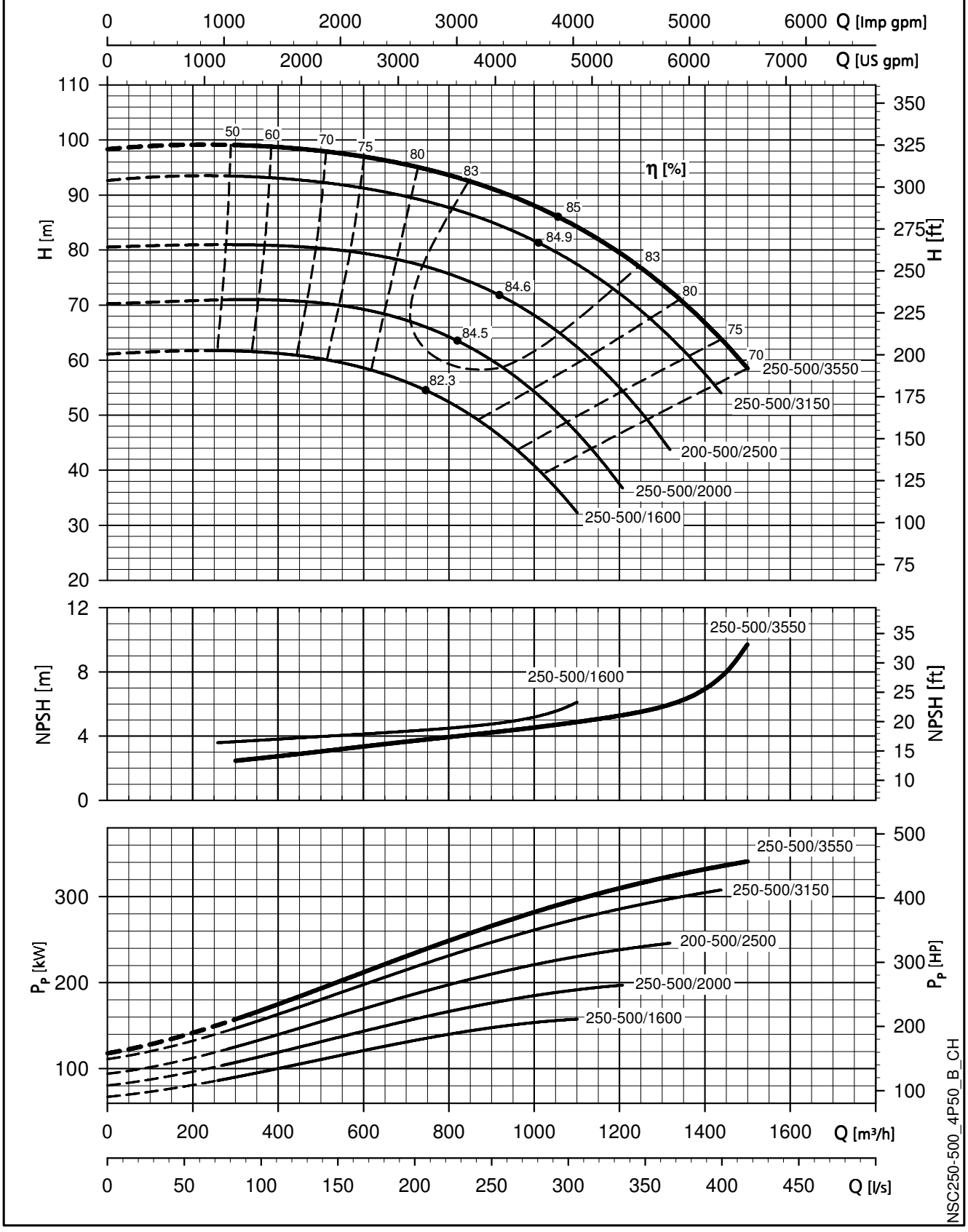

The NPSH values are laboratory values; for practical use we suggest increasing these values by 0,5 m.
These performances are valid for liquids with density ρ = 1,0 Kg/dm³ and kinematic viscosity ν = 1 mm²/sec.

e-NSC SERIES
OPERATING CHARACTERISTICS AT 50 Hz, 4 POLES

NSC 300-350	~ 1475 [rpm]	ISO 9906:2012 - Grade 3B

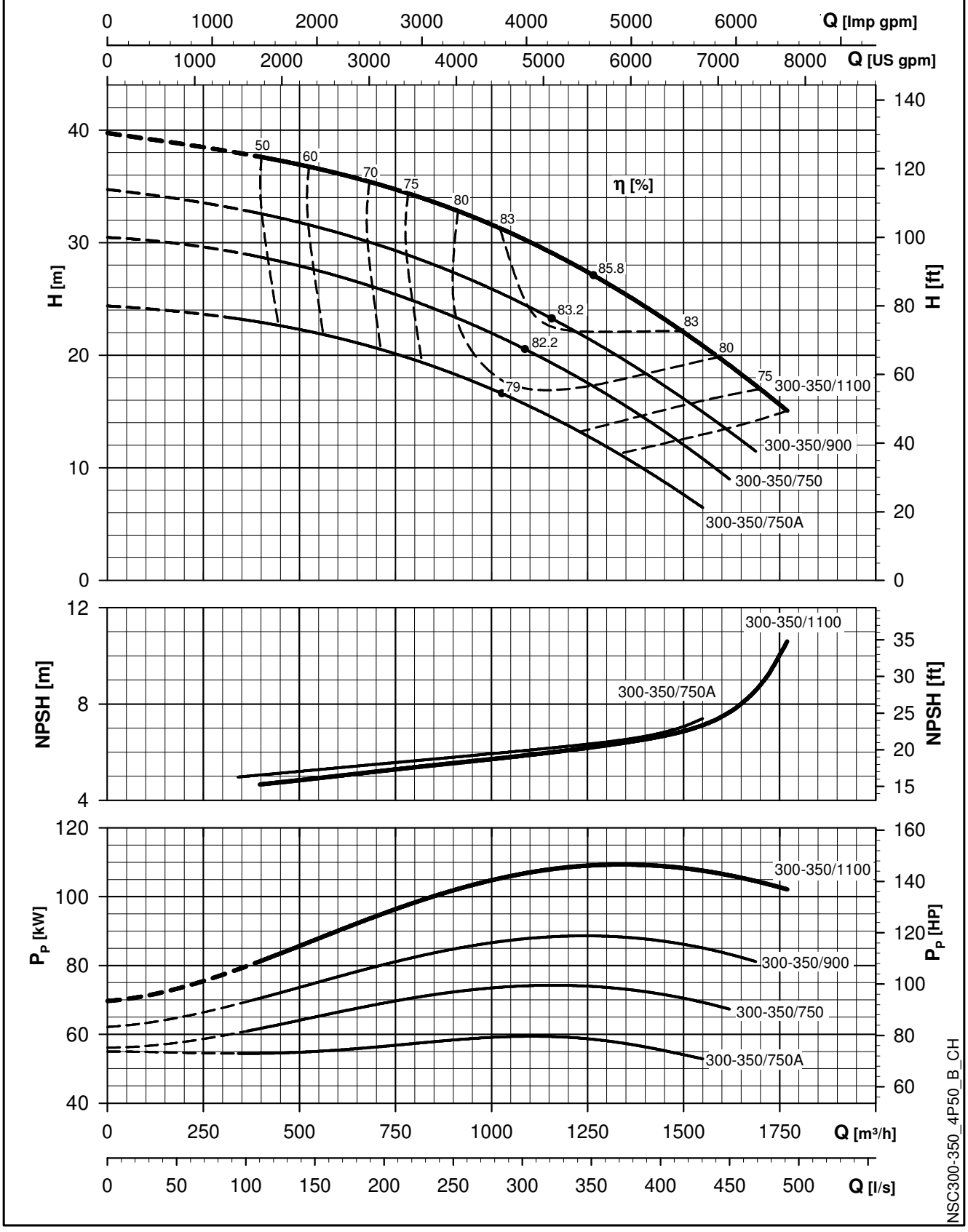

The NPSH values are laboratory values; for practical use we suggest increasing these values by 0,5 m.
These performances are valid for liquids with density ρ = 1,0 Kg/dm³ and kinematic viscosity ν = 1 mm²/sec.

LOWARA
a xylem brand

e-NSC SERIES
OPERATING CHARACTERISTICS AT 50 Hz, 4 POLES

NSC 300-400	~ 1475 [rpm]	ISO 9906:2012 - Grade 3B

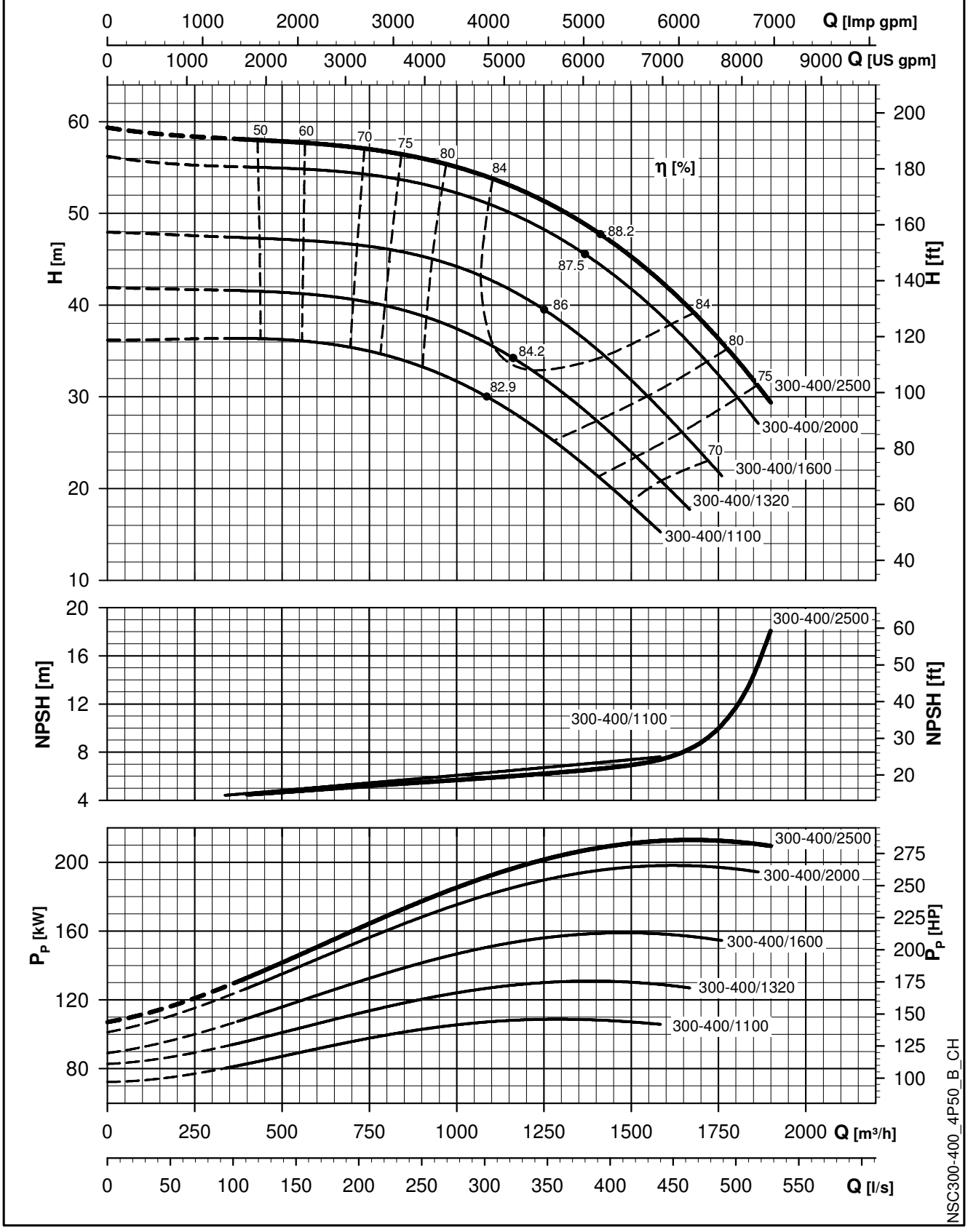

The NPSH values are laboratory values; for practical use we suggest increasing these values by 0,5 m.
These performances are valid for liquids with density $\rho = 1{,}0$ Kg/dm³ and kinematic viscosity $\nu = 1$ mm²/sec.

LOWARA
a xylem brand

e-NSC SERIES
OPERATING CHARACTERISTICS AT 50 Hz, 4 POLES

NSC 300-450	~ 1475 [rpm]	ISO 9906:2012 - Grade 3B

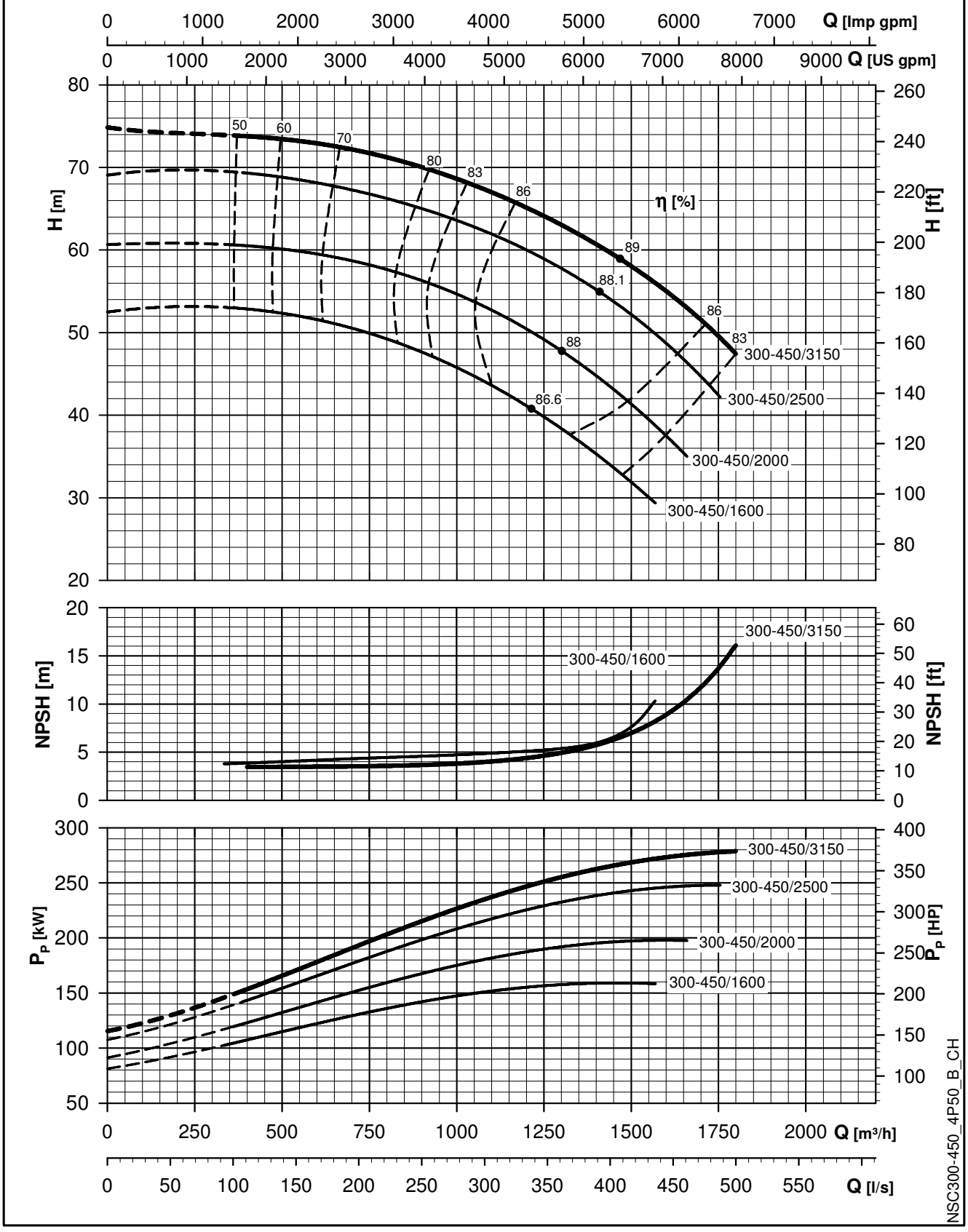

The NPSH values are laboratory values; for practical use we suggest increasing these values by 0,5 m.
These performances are valid for liquids with density ρ = 1,0 Kg/dm³ and kinematic viscosity ν = 1 mm²/sec.

LOWARA
a xylem brand

DIMENSIONS AND WEIGHTS

NSCE 32, 40, 50 SERIES
DIMENSIONS AND WEIGHTS AT 50 Hz, 2 POLES

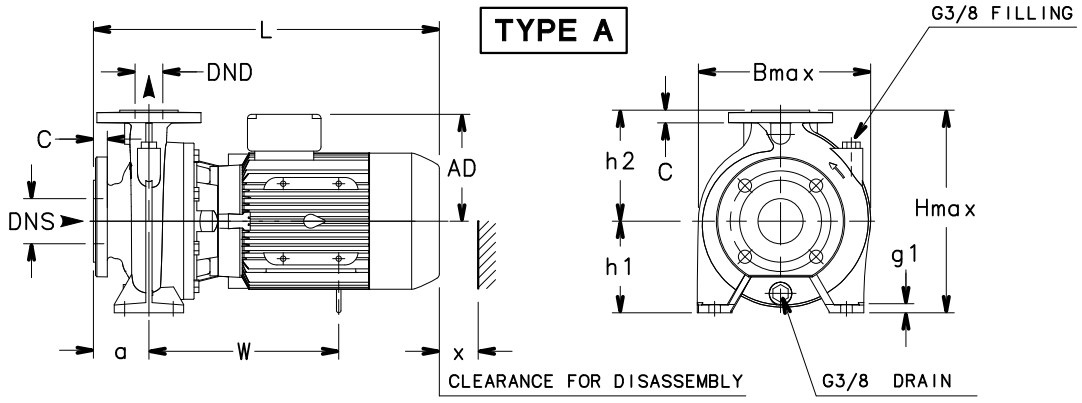

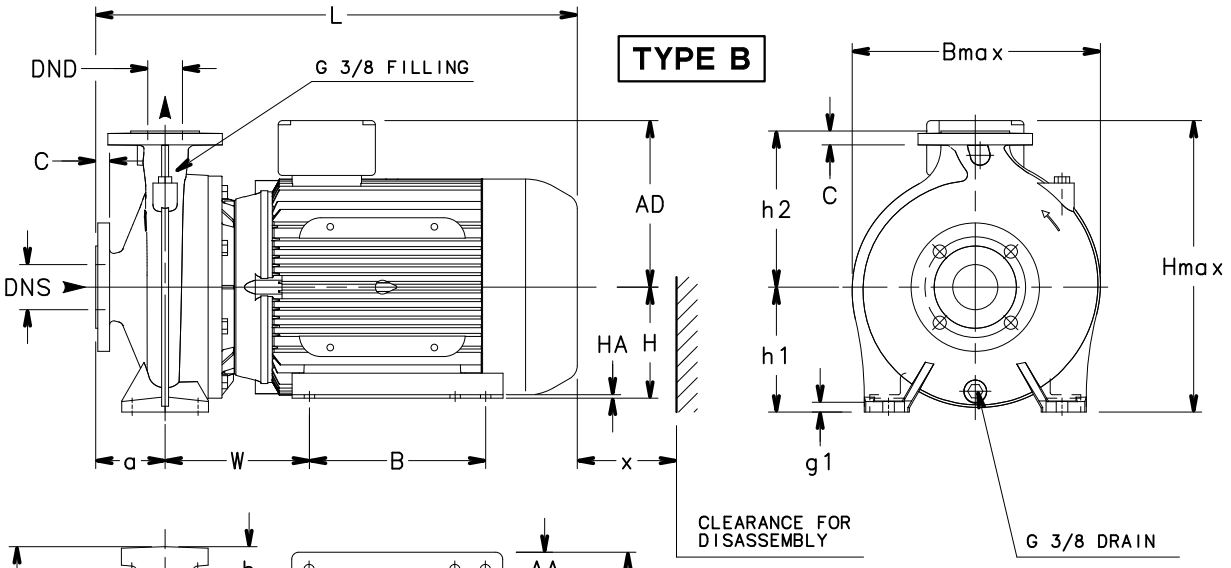

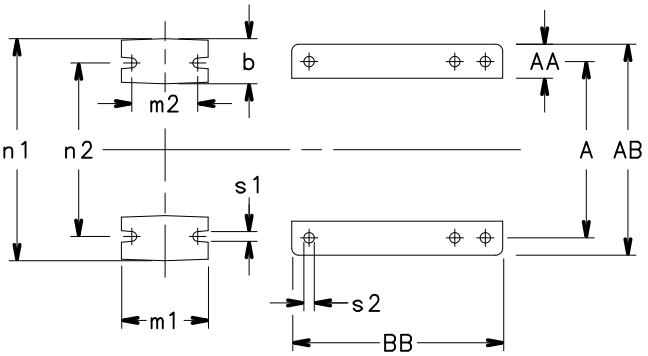

FLANGES

EN1092-2, PN 16 *)						ASME B16.5, Class 150 RF *)					
DN	D	K	C	df	L	DN	D	K	C	df	L
32	140	100	18	76	4x19	1 1/4	140	89	18	63.5	4x19
40	150	110	18	84	4x19	1 1/2	150	98.5	18	73	4x19
50	165	125	20	99	4x19	2	165	120.5	20	92	4x19
65	185	145	20	118	4x19	2 1/2	185	139.5	20	105	4x19

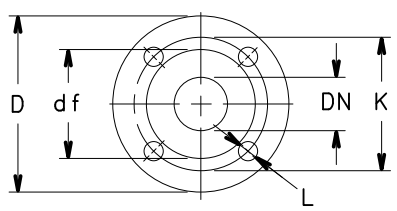

*)...VALUE "C" AND "D" MAY VARY FROM STANDARD.

A0008-EN_B_DD

LOWARA
a xylem brand

NSCE 32, 40, 50 SERIES
DIMENSIONS AND WEIGHTS AT 50 Hz, 2 POLES

PUMP TYPE NSCE..2	TYPE	DIMENSIONS (mm																										WEIGHT
		PUMP													MOTOR										B	H	L	x	
		DNS	DND	a	b	g1	h1	h2	m1	m2	n1	n2	s1	W	A	AA	AB	AD	B	BB	H	HA	s2	max	max			kg
32-125/11/S	A	50	32	80	50	14	112	140	100	70	190	140	14	235	-	-	-	129	-	-	-	-	-	242	252	443	86	29
32-125/15/S	A	50	32	80	50	14	112	140	100	70	190	140	14	235	-	-	-	129	-	-	-	-	-	242	252	443	86	30
32-125/22/P	A	50	32	80	50	14	112	140	100	70	190	140	14	245	-	-	-	134	-	-	-	-	-	242	252	478	86	34
32-125/30/P	A	50	32	80	50	14	112	140	100	70	190	140	14	245	-	-	-	134	-	-	-	-	-	242	252	478	86	38
32-160/22/P	A	50	32	80	50	14	132	160	100	70	240	190	14	245	-	-	-	134	-	-	-	-	-	248	292	478	86	36
32-160/30/P	A	50	32	80	50	14	132	160	100	70	240	190	14	245	-	-	-	134	-	-	-	-	-	248	292	478	86	39
32-160/40/P	A	50	32	80	50	14	132	160	100	70	240	190	14	273	-	-	-	154	-	-	-	-	-	248	292	499	86	42
32-160/55/P	A	50	32	80	50	14	132	160	100	70	240	190	14	285	-	-	-	168	-	-	-	-	-	248	292	533	86	50
32-200/30/P	A	50	32	80	50	14	160	180	100	70	240	190	14	245	-	-	-	134	-	-	-	-	-	286	340	478	86	45
32-200/40/P	A	50	32	80	50	14	160	180	100	70	240	190	14	273	-	-	-	154	-	-	-	-	-	286	340	499	86	49
32-200/55/P	A	50	32	80	50	14	160	180	100	70	240	190	14	285	-	-	-	168	-	-	-	-	-	286	340	533	86	56
32-200/75/P	A	50	32	80	50	14	160	180	100	70	240	190	14	305	-	-	-	191	-	-	-	-	-	286	351	547	86	73
32-250/75/P	A	50	32	100	65	21	180	225	125	95	320	250	14	305	-	-	-	191	-	-	-	-	-	334	405	567	95	80
32-250/92/P	A	50	32	100	65	21	180	225	125	95	320	250	14	343	-	-	-	191	-	-	-	-	-	334	405	605	95	86
32-250/110/P	A	50	32	100	65	21	180	225	125	95	320	250	14	343	-	-	-	191	-	-	-	-	-	334	405	605	95	91
32-250/150/P	B	50	32	100	65	21	180	225	125	95	320	250	14	208	254	49	304	240	210	304	160	5	15	334	420	694	95	128
40-125/15/S	A	65	40	80	50	14	112	140	100	70	210	160	14	235	-	-	-	129	-	-	-	-	-	237	252	443	96	31
40-125/22/P	A	65	40	80	50	14	112	140	100	70	210	160	14	245	-	-	-	134	-	-	-	-	-	237	252	478	96	35
40-125/30/P	A	65	40	80	50	14	112	140	100	70	210	160	14	245	-	-	-	134	-	-	-	-	-	237	252	478	96	39
40-125/40/P	A	65	40	80	50	14	112	140	100	70	210	160	14	273	-	-	-	154	-	-	-	-	-	237	252	499	96	42
40-160/30/P	A	65	40	80	50	14	132	160	100	70	240	190	14	245	-	-	-	134	-	-	-	-	-	250	292	478	92	41
40-160/40/P	A	65	40	80	50	14	132	160	100	70	240	190	14	273	-	-	-	154	-	-	-	-	-	250	292	499	92	44
40-160/55/P	A	65	40	80	50	14	132	160	100	70	240	190	14	285	-	-	-	168	-	-	-	-	-	250	300	533	92	54
40-160/75/P	A	65	40	80	50	14	132	160	100	70	240	190	14	305	-	-	-	191	-	-	-	-	-	259	323	547	92	71
40-200/55/P	A	65	40	100	50	14	160	180	100	70	265	212	14	285	-	-	-	168	-	-	-	-	-	290	340	553	90	57
40-200/75/P	A	65	40	100	50	14	160	180	100	70	265	212	14	305	-	-	-	191	-	-	-	-	-	290	351	567	90	74
40-200/92/P	A	65	40	100	50	14	160	180	100	70	265	212	14	343	-	-	-	191	-	-	-	-	-	290	351	605	90	80
40-200/110/P	A	65	40	100	50	14	160	180	100	70	265	212	14	343	-	-	-	191	-	-	-	-	-	290	351	605	90	84
40-250/92/P	A	65	40	100	65	16	180	225	125	95	320	250	14	343	-	-	-	191	-	-	-	-	-	338	405	605	104	91
40-250/110/P	A	65	40	100	65	16	180	225	125	95	320	250	14	343	-	-	-	191	-	-	-	-	-	338	405	605	104	95
40-250/150/P	B	65	40	100	65	16	180	225	125	95	320	250	14	208	254	49	304	240	210	304	160	5	15	338	420	694	104	131
40-250/185/P	B	65	40	100	65	16	180	225	125	95	320	250	14	208	254	49	304	240	254	304	160	5	15	338	420	694	104	141
40-250/220/P	B	65	40	100	65	16	180	225	125	95	320	250	14	208	254	49	304	240	254	304	160	5	15	338	420	694	104	150
50-125/30/P	A	65	50	100	50	14	132	160	100	70	240	190	14	247	-	-	-	134	-	-	-	-	-	255	292	500	107	42
50-125/40/P	A	65	50	100	50	14	132	160	100	70	240	190	14	275	-	-	-	154	-	-	-	-	-	255	292	521	107	45
50-125/55/P	A	65	50	100	50	14	132	160	100	70	240	190	14	287	-	-	-	168	-	-	-	-	-	255	300	555	107	59
50-125/75/P	A	65	50	100	50	14	132	160	100	70	240	190	14	307	-	-	-	191	-	-	-	-	-	263	323	569	107	76
50-160/55/P	A	65	50	100	50	14	160	180	100	70	265	212	14	285	-	-	-	168	-	-	-	-	-	289	340	553	103	60
50-160/75/P	A	65	50	100	50	14	160	180	100	70	265	212	14	305	-	-	-	191	-	-	-	-	-	289	351	567	103	77
50-160/92/P	A	65	50	100	50	14	160	180	100	70	265	212	14	343	-	-	-	191	-	-	-	-	-	289	351	605	103	83
50-160/110/P	A	65	50	100	50	14	160	180	100	70	265	212	14	343	-	-	-	191	-	-	-	-	-	289	351	605	103	87
50-200/92/P	A	65	50	100	50	14	160	200	100	70	265	212	14	345	-	-	-	191	-	-	-	-	-	305	360	605	98	83
50-200/110/P	A	65	50	100	50	14	160	200	100	70	265	212	14	345	-	-	-	191	-	-	-	-	-	305	360	605	98	87
50-200/150/P	B	65	50	100	50	14	160	200	100	70	265	212	14	210	254	49	304	240	210	304	160	5	15	313	400	694	98	126
50-200/185/P	B	65	50	100	50	14	160	200	100	70	265	212	14	210	254	49	304	240	254	304	160	5	15	313	400	694	98	136
50-250/150/P	B	65	50	100	65	16	180	225	125	95	320	250	14	208	254	49	304	240	210	304	160	5	15	352	420	694	110	132
50-250/185/P	B	65	50	100	65	16	180	225	125	95	320	250	14	208	254	49	304	240	254	304	160	5	15	352	420	694	110	142
50-250/220/P	B	65	50	100	65	16	180	225	125	95	320	250	14	208	254	49	304	240	254	304	160	5	15	352	420	694	110	151

For shims and supports see accessories section.

nsce-32-40-50_2p50-en_d_td

NOTE: Pumps with flanges according to EN 1092-2 as standard; available ASME B16.5 version on request.

LOWARA
a xylem brand

NSCE 65, 80 SERIES
DIMENSIONS AND WEIGHTS AT 50 Hz, 2 POLES

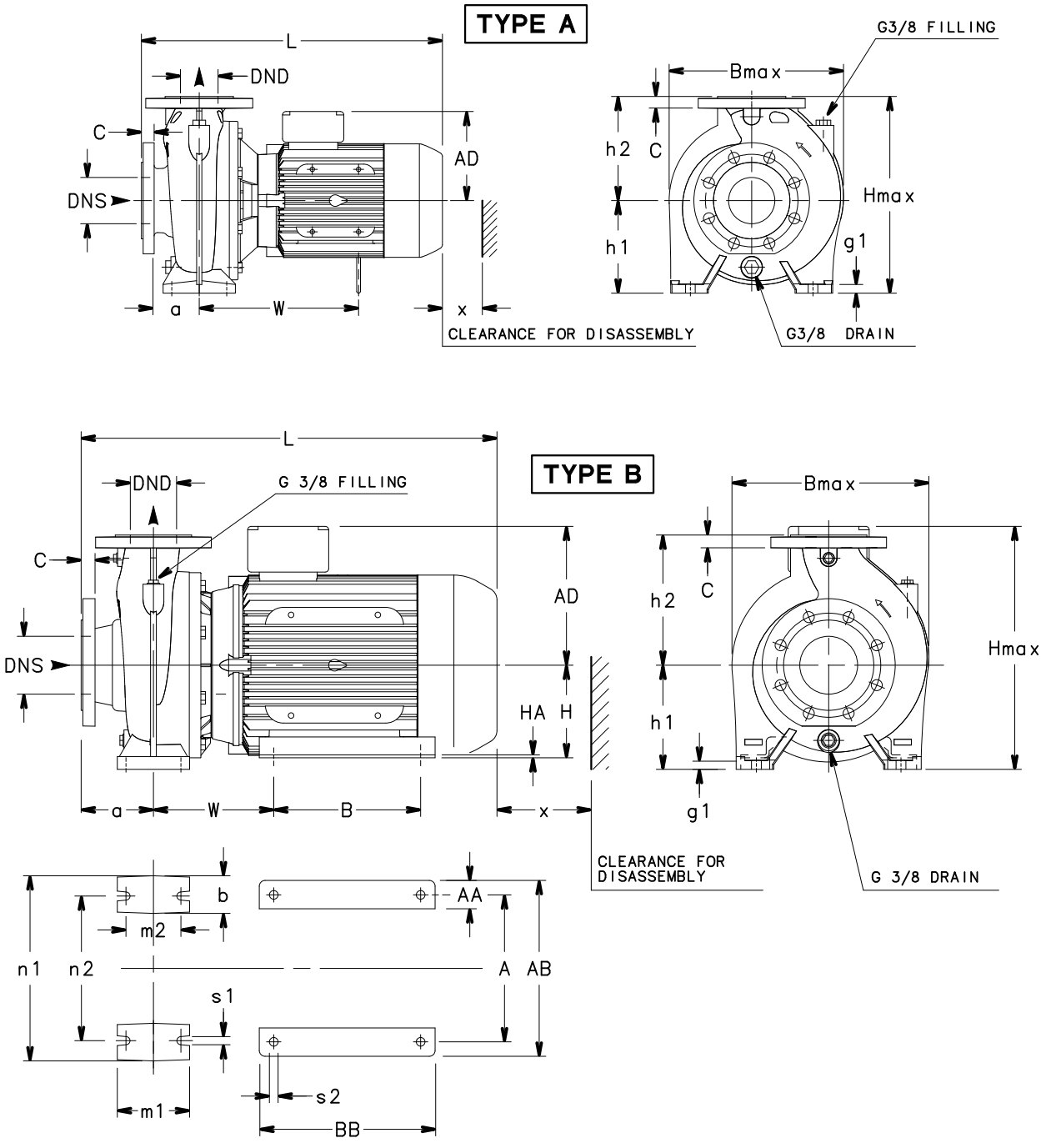

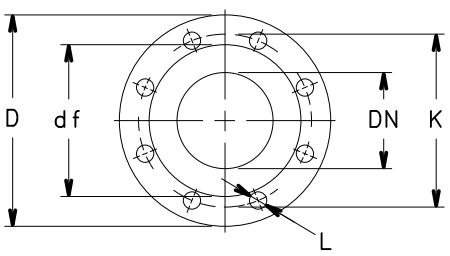

FLANGES

EN1092-2, PN 16 *)						ASME B16.5, Class 150 RF *)					
DN	D	K	C	df	L	DN	D	K	C	df	L
65	185	145	20	118	4x19	2 1/2	185	139.5	20	105	4x19
80	200	160	22	132	8x19	3	200	152.5	22	127	8x19
100	230	180	24	157	8x19	4	230	190.5	24	157	8x19

*)...VALUE "C" AND "D" MAY VARY FROM STANDARD.

A0009-EN_B_DD

LOWARA
a xylem brand

NSCE 65, 80 SERIES
DIMENSIONS AND WEIGHTS AT 50 Hz, 2 POLES

PUMP TYPE NSCE..2	TYPE	DIMENSIONS (mm)																									WEIGHT
		PUMP													MOTOR										B	H	L	x	
		DNS	DND	a	b	g1	h1	h2	m1	m2	n1	n2	s1	W	A	AA	AB	AD	B	BB	H	HA	s2	max	max			kg
65-125/40/P	A	80	65	100	65	16	160	180	125	95	280	212	14	275	-	-	-	154	-	-	-	-	-	300	340	521	100	56
65-125/55/P	A	80	65	100	65	16	160	180	125	95	280	212	14	287	-	-	-	168	-	-	-	-	-	300	340	555	100	65
65-125/75/P	A	80	65	100	65	16	160	180	125	95	280	212	14	307	-	-	-	191	-	-	-	-	-	300	351	569	100	82
65-125/92/P	A	80	65	100	65	16	160	180	125	95	280	212	14	345	-	-	-	191	-	-	-	-	-	300	351	607	100	88
65-125/110/P	A	80	65	100	65	16	160	180	125	95	280	212	14	345	-	-	-	191	-	-	-	-	-	300	351	607	100	92
65-160/75/P	A	80	65	100	65	16	160	200	125	95	280	212	14	305	-	-	-	191	-	-	-	-	-	335	360	567	108	85
65-160/92/P	A	80	65	100	65	16	160	200	125	95	280	212	14	343	-	-	-	191	-	-	-	-	-	335	360	605	108	91
65-160/110/P	A	80	65	100	65	16	160	200	125	95	280	212	14	343	-	-	-	191	-	-	-	-	-	335	360	605	108	96
65-160/150/P	B	80	65	100	65	16	160	200	125	95	280	212	14	208	254	49	304	240	210	304	160	5	15	335	400	694	108	133
65-160/185/P	B	80	65	100	65	16	160	200	125	95	280	212	14	208	254	49	304	240	254	304	160	5	15	335	400	694	108	143
65-200/110/P	A	80	65	100	65	16	180	225	125	95	320	250	14	343	-	-	-	191	-	-	-	-	-	348	405	605	118	101
65-200/150/P	B	80	65	100	65	16	180	225	125	95	320	250	14	208	254	49	304	240	210	304	160	5	15	348	420	694	118	138
65-200/185/P	B	80	65	100	65	16	180	225	125	95	320	250	14	208	254	49	304	240	254	304	160	5	15	348	420	694	118	148
65-200/220/P	B	80	65	100	65	16	180	225	125	95	320	250	14	208	254	49	304	240	254	304	160	5	15	348	420	694	118	157
80-160/110/P	A	100	80	125	65	16	180	225	125	95	320	250	14	343	-	-	-	191	-	-	-	-	-	340	405	630	122	110
80-160/150/P	B	100	80	125	65	16	180	225	125	95	320	250	14	208	254	49	304	240	210	304	160	5	15	340	420	719	122	147
80-160/185/P	B	100	80	125	65	16	180	225	125	95	320	250	14	208	254	49	304	240	254	304	160	5	15	340	420	719	122	157
80-160/220/P	B	100	80	125	65	16	180	225	125	95	320	250	14	208	254	49	304	240	254	304	160	5	15	340	420	719	122	166

For shims and supports see accessories section.

nsce-65-80_2p50-en_c_td

NOTE: Pumps with flanges according to EN 1092-2 as standard; available ASME B16.5 version on request.

NSCE 32, 40, 50 SERIES
DIMENSIONS AND WEIGHTS AT 50 Hz, 4 POLES

TYPE A

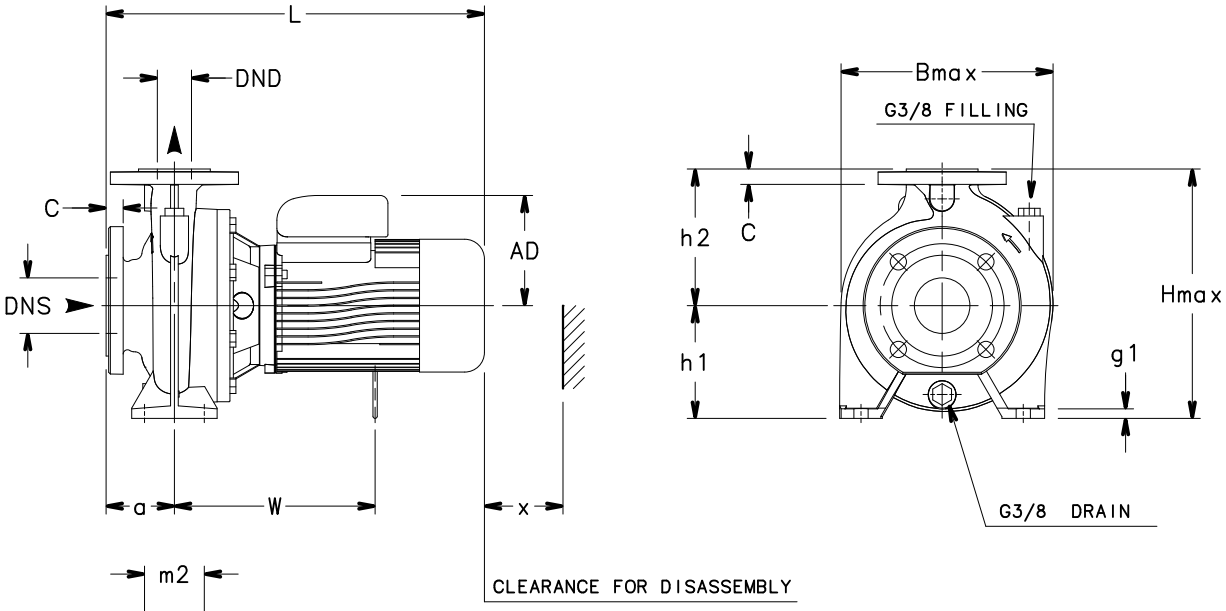

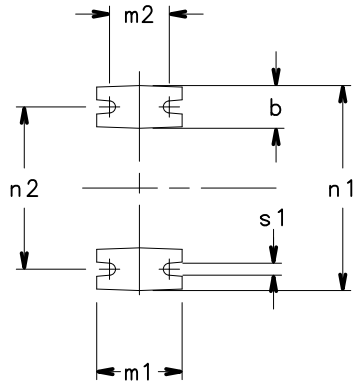

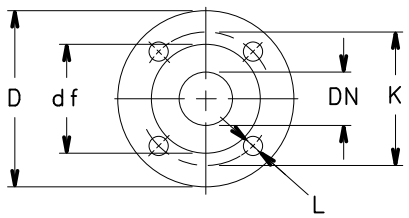

FLANGES

EN1092-2, PN 16 *)						ASME B16.5, Class 150 RF *)					
DN	D	K	C	df	L	DN	D	K	C	df	L
32	140	100	18	76	4x19	1 1/4	140	89	18	63.5	4x19
40	150	110	18	84	4x19	1 1/2	150	98.5	18	73	4x19
50	165	125	20	99	4x19	2	165	120.5	20	92	4x19
65	185	145	20	118	4x19	2 1/2	185	139.5	20	105	4x19

*)...VALUE "C" AND "D" MAY VARY FROM STANDARD.

A0010-EN_B_DD

LOWARA
a xylem brand

NSCE 32, 40, 50 SERIES
DIMENSIONS AND WEIGHTS AT 50 Hz, 4 POLES

PUMP TYPE NSCE..4	TYPE	DIMENSIONS (mm)														B	H	L	x	WEIGHT
		DNS	DND	a	AD	b	g1	h1	h2	m1	m2	n1	n2	s1	W	max	max			kg
32-125/02B/S	A	50	32	80	121	50	14	112	140	100	70	190	140	14	215	242	252	411	86	25
32-125/02A/S	A	50	32	80	121	50	14	112	140	100	70	190	140	14	215	242	252	411	86	25
32-125/02/S	A	50	32	80	121	50	14	112	140	100	70	190	140	14	215	242	252	411	86	25
32-125/03/S	A	50	32	80	121	50	14	112	140	100	70	190	140	14	215	242	252	411	86	25
32-160/02/S	A	50	32	80	121	50	14	132	160	100	70	240	190	14	215	248	292	411	86	26
32-160/03/S	A	50	32	80	121	50	14	132	160	100	70	240	190	14	215	248	292	411	86	26
32-160/05A/S	A	50	32	80	129	50	14	132	160	100	70	240	190	14	235	248	292	443	86	28
32-160/05/S	A	50	32	80	129	50	14	132	160	100	70	240	190	14	235	248	292	443	86	28
32-200/05A/S	A	50	32	80	129	50	14	160	180	100	70	240	190	14	235	286	340	443	86	35
32-200/05/S	A	50	32	80	129	50	14	160	180	100	70	240	190	14	235	286	340	443	86	35
32-200/07/X	A	50	32	80	128	50	14	160	180	100	70	240	190	14	-	286	340	411	86	36
32-200/11/P	A	50	32	80	134	50	14	160	180	100	70	240	190	14	245	286	340	478	86	42
32-250/15B/P	A	50	32	100	134	65	21	180	225	125	95	320	250	14	245	334	405	498	95	51
32-250/15A/P	A	50	32	100	134	65	21	180	225	125	95	320	250	14	245	334	405	498	95	51
32-250/15/P	A	50	32	100	134	65	21	180	225	125	95	320	250	14	245	334	405	498	95	51
32-250/22/P	A	50	32	100	168	65	21	180	225	125	95	320	250	14	285	334	405	522	95	61
40-125/02A/S	A	65	40	80	121	50	14	112	140	100	70	210	160	14	215	237	252	411	96	26
40-125/02/S	A	65	40	80	121	50	14	112	140	100	70	210	160	14	215	237	252	411	96	26
40-125/03/S	A	65	40	80	121	50	14	112	140	100	70	210	160	14	215	237	252	411	96	26
40-125/05/S	A	65	40	80	129	50	14	112	140	100	70	210	160	14	235	237	252	443	96	28
40-160/03/S	A	65	40	80	121	50	14	132	160	100	70	240	190	14	215	250	292	411	92	28
40-160/05/S	A	65	40	80	129	50	14	132	160	100	70	240	190	14	235	250	292	443	92	30
40-160/07/X	A	65	40	80	128	50	14	132	160	100	70	240	190	14	-	250	292	411	92	34
40-160/11/P	A	65	40	80	134	50	14	132	160	100	70	240	190	14	245	250	292	478	92	40
40-200/07/X	A	65	40	100	128	50	14	160	180	100	70	265	212	14	-	290	340	431	90	36
40-200/11/P	A	65	40	100	134	50	14	160	180	100	70	265	212	14	245	290	340	498	90	42
40-200/15A/P	A	65	40	100	134	50	14	160	180	100	70	265	212	14	245	290	340	498	90	42
40-200/15/P	A	65	40	100	134	50	14	160	180	100	70	265	212	14	245	290	340	498	90	45
40-250/15A/P	A	65	40	100	134	65	16	180	225	125	95	320	250	14	245	338	405	498	104	54
40-250/15/P	A	65	40	100	134	65	16	180	225	125	95	320	250	14	245	338	405	498	104	54
40-250/22A/P	A	65	40	100	168	65	16	180	225	125	95	320	250	14	285	338	405	522	104	64
40-250/22/P	A	65	40	100	168	65	16	180	225	125	95	320	250	14	285	338	405	522	104	64
40-250/30/P	A	65	40	100	168	65	16	180	225	125	95	320	250	14	285	338	405	553	104	68
50-125/03/S	A	65	50	100	121	50	14	132	160	100	70	240	190	14	217	255	292	433	107	29
50-125/05/S	A	65	50	100	129	50	14	132	160	100	70	240	190	14	237	255	292	465	107	31
50-125/07/X	A	65	50	100	128	50	14	132	160	100	70	240	190	14	-	255	292	433	107	35
50-125/11/P	A	65	50	100	134	50	14	132	160	100	70	240	190	14	247	255	292	500	107	41
50-160/07/X	A	65	50	100	128	50	14	160	180	100	70	265	212	14	-	289	340	431	103	39
50-160/11A/P	A	65	50	100	134	50	14	160	180	100	70	265	212	14	245	289	340	498	103	45
50-160/11/P	A	65	50	100	134	50	14	160	180	100	70	265	212	14	245	289	340	498	103	45
50-160/15/P	A	65	50	100	134	50	14	160	180	100	70	265	212	14	245	289	340	498	103	48
50-200/15A/P	A	65	50	100	134	50	14	160	200	100	70	265	212	14	247	305	360	498	98	48
50-200/15/P	A	65	50	100	134	50	14	160	200	100	70	265	212	14	247	305	360	498	98	48
50-200/22A/P	A	65	50	100	168	50	14	160	200	100	70	265	212	14	287	305	360	522	98	58
50-200/22/P	A	65	50	100	168	50	14	160	200	100	70	265	212	14	287	305	360	522	98	58
50-250/22A/P	A	65	50	100	168	65	16	180	225	125	95	320	250	14	285	352	405	522	110	65
50-250/22/P	A	65	50	100	168	65	16	180	225	125	95	320	250	14	285	358	405	522	110	65
50-250/30/P	A	65	50	100	168	65	16	180	225	125	95	320	250	14	285	358	405	553	110	69
50-250/40/P	A	65	50	100	168	65	16	180	225	125	95	320	250	14	345	358	405	582	110	88

NOTE: Pumps with flanges according to EN 1092-2 as standard; available ASME B16.5 version on request.

nsce-32-40-50-4p50-en_d_td

NSCE 65, 80 SERIES
DIMENSIONS AND WEIGHTS AT 50 Hz, 4 POLES

TYPE A

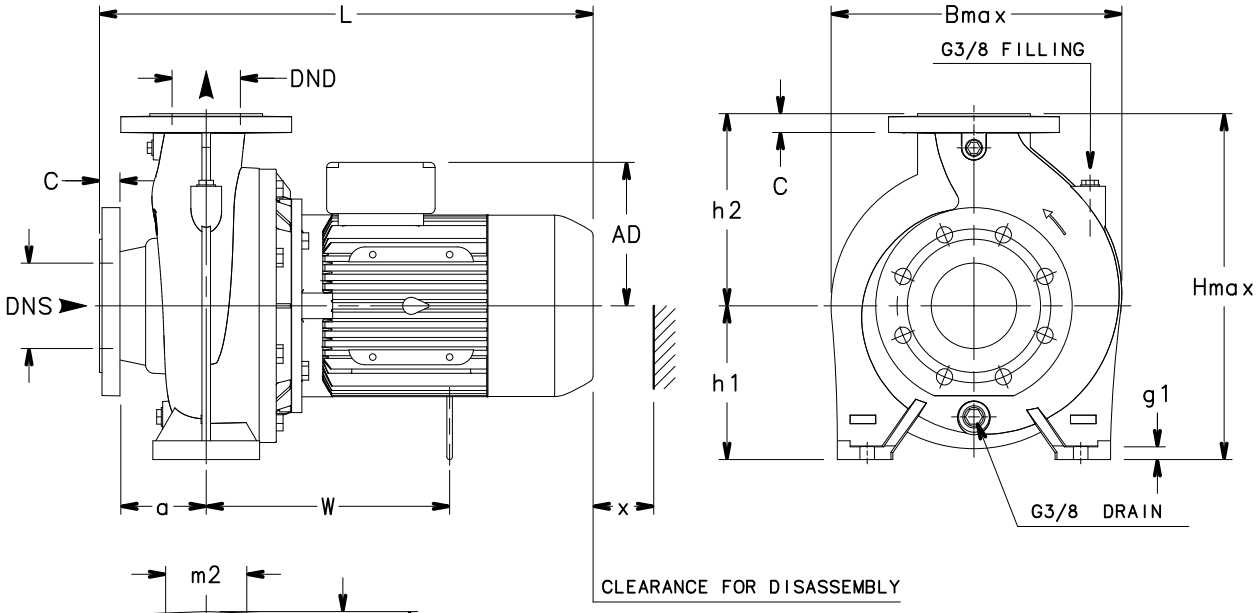

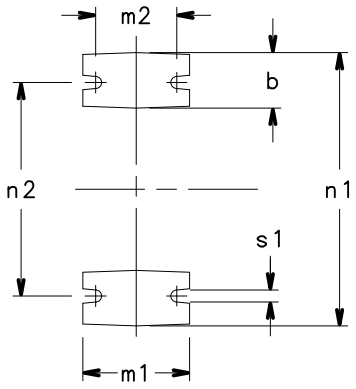

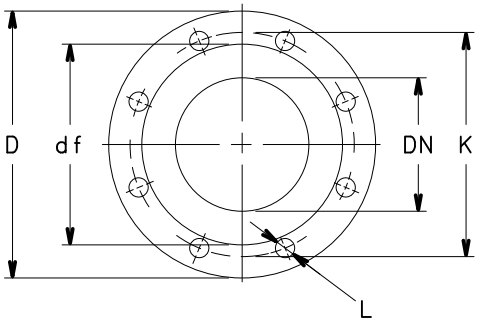

FLANGES

EN1092-2, PN 16 *)						ASME B16.5, Class 150 RF *)					
DN	D	K	C	df	L	DN	D	K	C	df	L
65	185	145	20	118	4x19	2 1/2	185	139.5	20	105	4x19
80	200	160	22	132	8x19	3	200	152.5	22	127	8x19
100	230	180	24	157	8x19	4	230	190.5	24	157	8x19

*)...VALUE "C" AND "D" MAY VARY FROM STANDARD.

A0011-EN_B_DD

LOWARA
a xylem brand

NSCE 65, 80 SERIES
DIMENSIONS AND WEIGHTS AT 50 Hz, 4 POLES

PUMP TYPE NSCE..4	TYPE	DIMENSIONS (mm)														B	H	L	x	WEIGHT
		DNS	DND	a	AD	b	g1	h1	h2	m1	m2	n1	n2	s1	W	max	max			kg
65-125/05/S	A	80	65	100	139	65	16	160	180	125	95	280	212	14	237	300	340	465	100	40
65-125/07/X	A	80	65	100	128	65	16	160	180	125	95	280	212	14	-	300	340	433	100	44
65-125/11/P	A	80	65	100	134	65	16	160	180	125	95	280	212	14	247	300	340	500	100	50
65-125/15/P	A	80	65	100	134	65	16	160	180	125	95	280	212	14	247	300	340	500	100	53
65-160/15B/P	A	80	65	100	134	65	16	160	200	125	95	280	212	14	245	335	360	498	108	55
65-160/15A/P	A	80	65	100	134	65	16	160	200	125	95	280	212	14	245	335	360	498	108	55
65-160/15/P	A	80	65	100	134	65	16	160	200	125	95	280	212	14	245	335	360	498	108	55
65-160/22A/P	A	80	65	100	168	65	16	160	200	125	95	280	212	14	285	335	360	522	108	65
65-160/22/P	A	80	65	100	168	65	16	160	200	125	95	280	212	14	285	335	360	522	108	65
65-200/15/P	A	80	65	100	134	65	16	180	225	125	95	320	250	14	245	348	405	498	118	58
65-200/22A/P	A	80	65	100	168	65	16	180	225	125	95	320	250	14	285	348	405	522	118	68
65-200/22/P	A	80	65	100	168	65	16	180	225	125	95	320	250	14	285	348	405	522	118	68
65-200/30/P	A	80	65	100	168	65	16	180	225	125	95	320	250	14	285	348	405	553	118	71
65-200/40/P	A	80	65	100	168	65	16	180	225	125	95	320	250	14	345	348	405	582	118	90
80-160/15/P	A	100	80	125	134	65	16	180	225	125	95	320	250	14	245	340	405	523	122	65
80-160/22A/P	A	100	80	125	168	65	16	180	225	125	95	320	250	14	285	340	405	547	122	75
80-160/22/P	A	100	80	125	168	65	16	180	225	125	95	320	250	14	285	340	405	547	122	75
80-160/30/P	A	100	80	125	168	65	16	180	225	125	95	320	250	14	285	340	405	578	122	78

NOTE: Pumps with flanges according to EN 1092-2 as standard; available ASME B16.5 version on request.

nsce-65-80-4p50-en_d_td

NSC2 SERIES
DIMENSIONS AND WEIGHTS AT 50 Hz, 2 POLES

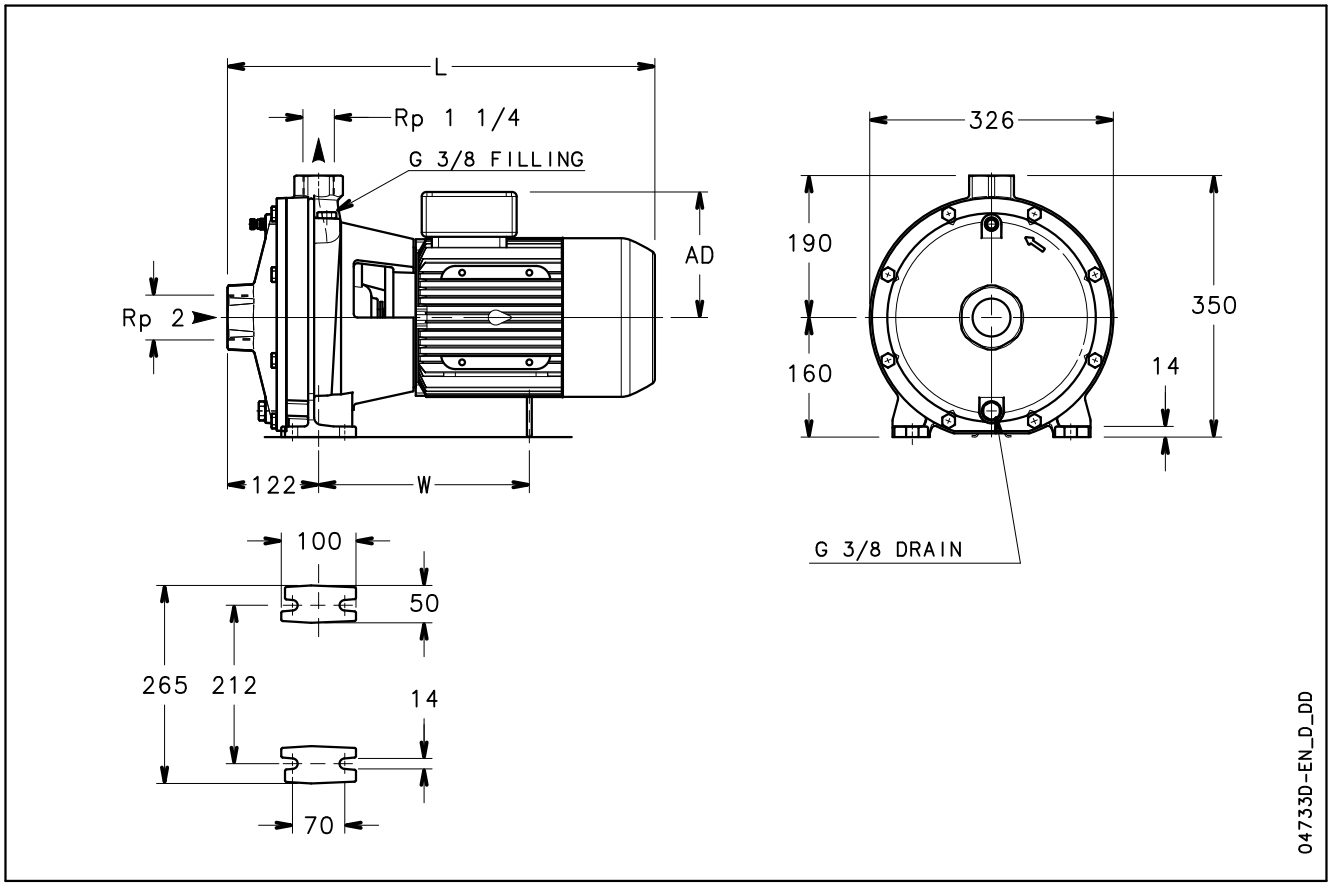

PUMP TYPE	DIMENSIONS (mm)			WEIGHT
	L	W	AD	kg
NSC2 32-250/55/P	572	282	168	74
NSC2 32-250/75/P	607	323	191	90

Nsc2-2p50-en_a_td

NSC2 SERIES
DIMENSIONS AND WEIGHTS AT 50 Hz, 4 POLES

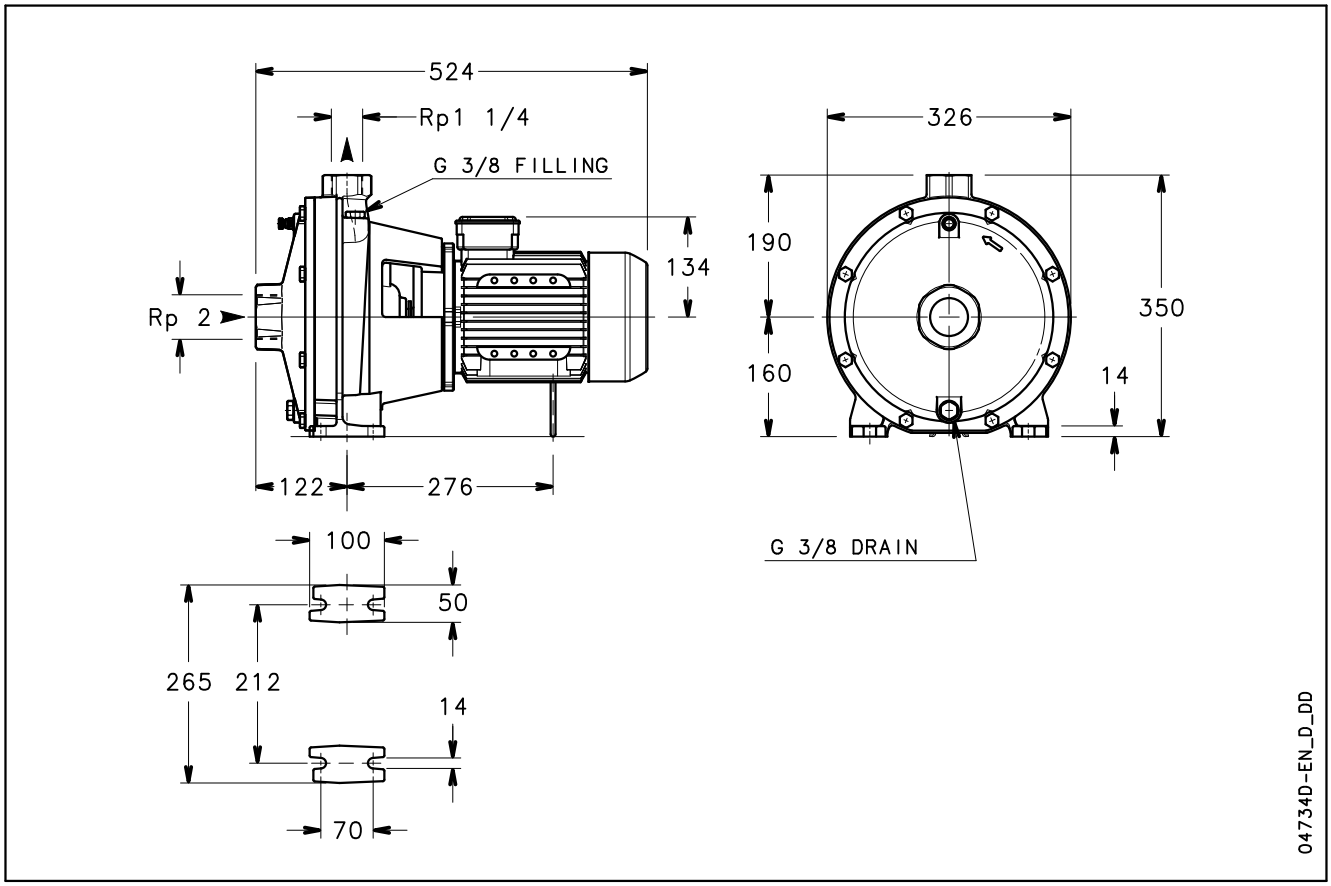

PUMP TYPE	WEIGHT kg
NSC2 32-250/11A/P	53
NSC2 32-250/11/P	55

Nsc2-4p50-en_b_td

LOWARA
a xylem brand

NSCS 32, 40, 50 SERIES
DIMENSIONS AND WEIGHTS AT 50 Hz, 2 POLES

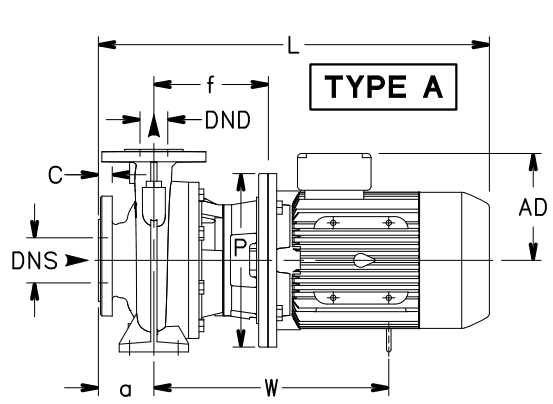

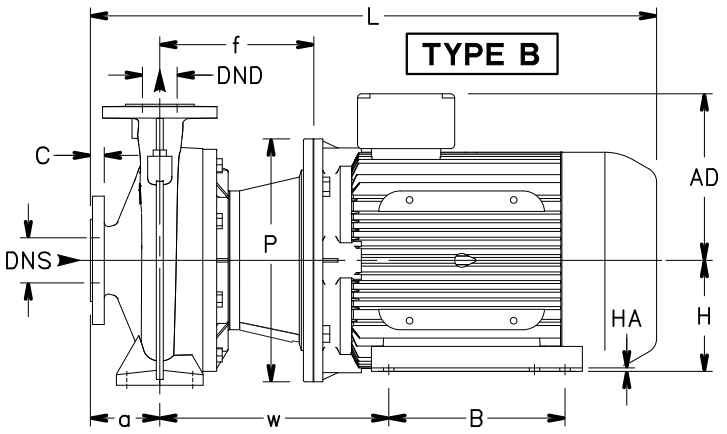

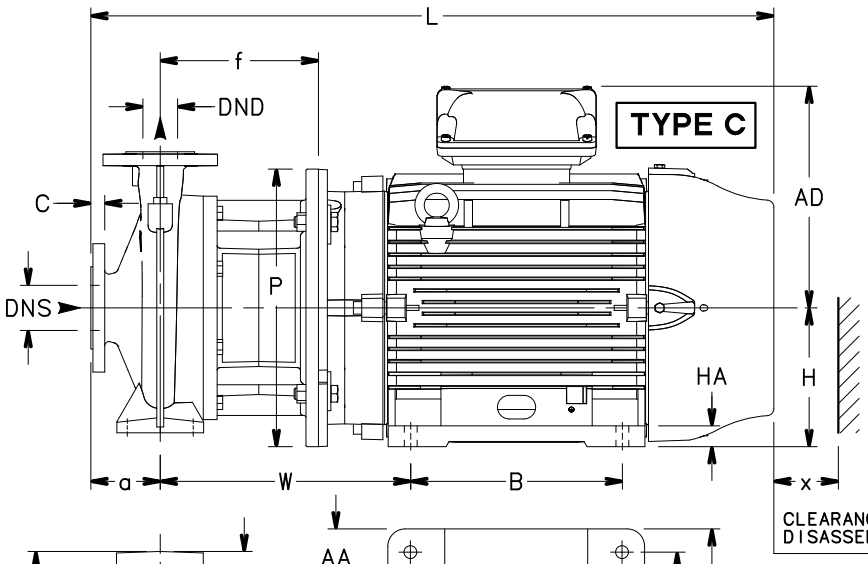

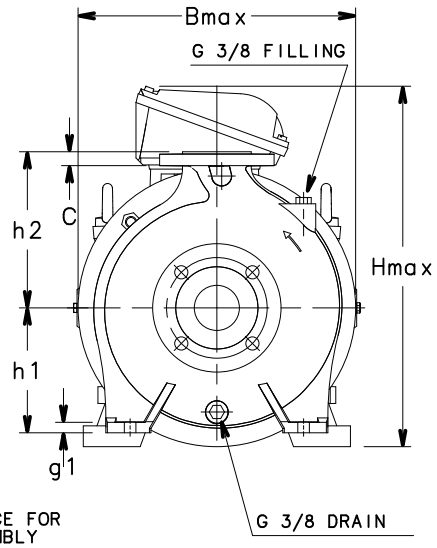

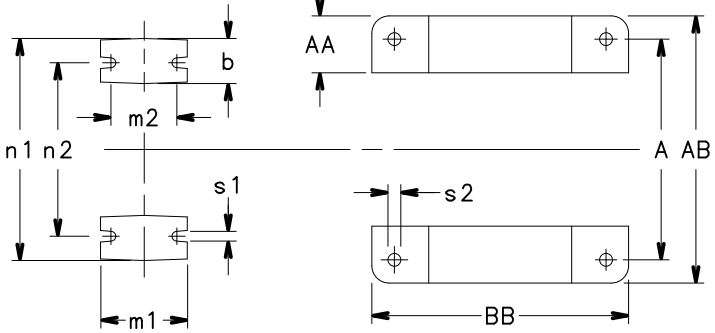

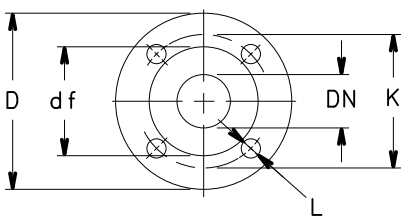

FLANGES

EN1092-2, PN 16 *)						ASME B16.5, Class 150 RF *)					
DN	D	K	C	df	L	DN	D	K	C	df	L
32	140	100	18	76	4x19	1 1/4	140	89	18	63.5	4x19
40	150	110	18	84	4x19	1 1/2	150	98.5	18	73	4x19
50	165	125	20	99	4x19	2	165	120.5	20	92	4x19
65	185	145	20	118	4x19	2 1/2	185	139.5	20	105	4x19

*)..VALUE "C" AND "D" MAY VARY FROM STANDARD.

A0012-EN_C_DD

LOWARA
a xylem brand

NSCS 32, 40, 50 SERIES
DIMENSIONS AND WEIGHTS AT 50 Hz, 2 POLES

PUMP TYPE NSCS..2	TYPE	DIMENSIONS (mm)																												WEIGHT
		PUMP															MOTOR									B	H	L	x	
		DNS	DND	a	b	f	g1	h1	h2	m1	m2	n1	n2	P	s1	W	A	AA	AB	AD	B	BB	H	HA	s2	max	max			kg
32-125/11/S	A	50	32	80	50	155	14	112	140	100	70	190	140	200	14	290	-	-	-	129	-	-	-	-	-	242	252	498	86	33
32-125/15/S	A	50	32	80	50	155	14	112	140	100	70	190	140	200	14	290	-	-	-	129	-	-	-	-	-	242	252	498	86	34
32-125/22/P	A	50	32	80	50	155	14	112	140	100	70	190	140	200	14	300	-	-	-	134	-	-	-	-	-	242	252	533	86	38
32-125/30/P	A	50	32	80	50	165	14	112	140	100	70	190	140	250	14	310	-	-	-	134	-	-	-	-	-	250	265	543	86	43
32-160/22/P	A	50	32	80	50	155	14	132	160	100	70	240	190	200	14	300	-	-	-	134	-	-	-	-	-	248	292	533	86	40
32-160/30/P	A	50	32	80	50	165	14	132	160	100	70	240	190	250	14	310	-	-	-	134	-	-	-	-	-	250	292	543	86	44
32-160/40/P	A	50	32	80	50	165	14	132	160	100	70	240	190	250	14	338	-	-	-	154	-	-	-	-	-	250	292	564	86	47
32-160/55/P	A	50	32	80	50	192	14	132	160	100	70	240	190	300	14	399	-	-	-	168	-	-	-	-	-	300	318	647	86	56
32-200/30/P	A	50	32	80	50	165	14	160	180	100	70	240	190	250	14	310	-	-	-	134	-	-	-	-	-	286	340	543	86	50
32-200/40/P	A	50	32	80	50	165	14	160	180	100	70	240	190	250	14	338	-	-	-	154	-	-	-	-	-	286	340	564	86	54
32-200/55/P	A	50	32	80	50	192	14	160	180	100	70	240	190	300	14	399	-	-	-	168	-	-	-	-	-	300	340	647	86	63
32-200/75/P	A	50	32	80	50	192	14	160	180	100	70	240	190	300	14	397	-	-	-	191	-	-	-	-	-	300	351	639	86	80
32-250/75/P	A	50	32	100	65	192	21	180	225	125	95	320	250	300	14	305	-	-	-	191	-	-	-	-	-	334	405	659	95	80
32-250/110A/P	B	50	32	100	65	222	21	180	225	125	95	320	250	350	14	330	254	49	304	240	210	304	160	5	15	350	420	816	95	110
32-250/110/P	B	50	32	100	65	222	21	180	225	125	95	320	250	350	14	330	254	49	304	240	210	304	160	5	15	350	420	816	95	114
32-250/150/P	B	50	32	100	65	222	21	180	225	125	95	320	250	350	14	330	254	49	304	240	210	304	160	5	15	350	420	816	95	128
40-125/15/S	A	65	40	80	50	155	14	112	140	100	70	210	160	200	14	290	-	-	-	129	-	-	-	-	-	237	252	498	96	35
40-125/22/P	A	65	40	80	50	155	14	112	140	100	70	210	160	200	14	300	-	-	-	134	-	-	-	-	-	237	252	533	96	39
40-125/30/P	A	65	40	80	50	165	14	112	140	100	70	210	160	250	14	310	-	-	-	134	-	-	-	-	-	250	265	543	96	44
40-125/40/P	A	65	40	80	50	165	14	112	140	100	70	210	160	250	14	338	-	-	-	154	-	-	-	-	-	250	265	564	96	47
40-160/30/P	A	65	40	80	50	165	14	132	160	100	70	240	190	250	14	310	-	-	-	134	-	-	-	-	-	250	292	543	92	46
40-160/40/P	A	65	40	80	50	165	14	132	160	100	70	240	190	250	14	338	-	-	-	154	-	-	-	-	-	250	292	564	92	49
40-160/55/P	A	65	40	80	50	192	14	132	160	100	70	240	190	300	14	399	-	-	-	168	-	-	-	-	-	300	318	647	92	60
40-160/75/P	A	65	40	80	50	192	14	132	160	100	70	240	190	300	14	397	-	-	-	191	-	-	-	-	-	300	341	639	92	77
40-200/55/P	A	65	40	100	50	192	14	160	180	100	70	265	212	300	14	399	-	-	-	168	-	-	-	-	-	300	340	667	90	64
40-200/75/P	A	65	40	100	50	192	14	160	180	100	70	265	212	300	14	397	-	-	-	191	-	-	-	-	-	300	351	659	90	81
40-200/110A/P	B	65	40	100	50	222	14	160	180	100	70	265	212	350	14	330	254	49	304	240	210	304	160	5	15	350	420	816	90	115
40-200/110/P	B	65	40	100	50	222	14	160	180	100	70	265	212	350	14	330	254	49	304	240	210	304	160	5	15	350	420	816	90	119
40-250/110A/P	B	65	40	100	65	222	16	180	225	125	95	320	250	350	14	330	254	49	304	240	210	304	160	5	15	350	420	816	104	126
40-250/110/P	B	65	40	100	65	222	16	180	225	125	95	320	250	350	14	330	254	49	304	240	210	304	160	5	15	350	420	816	104	130
40-250/150/P	B	65	40	100	65	222	16	180	225	125	95	320	250	350	14	330	254	49	304	240	210	304	160	5	15	350	420	816	104	144
40-250/185/P	B	65	40	100	65	222	16	180	225	125	95	320	250	350	14	330	254	49	304	240	254	304	160	5	15	350	420	816	104	154
40-250/220/P	B	65	40	100	65	222	16	180	225	125	95	320	250	350	14	330	254	49	304	240	254	304	160	5	15	350	420	816	104	155
50-125/30/P	A	65	50	100	50	167	14	132	160	100	70	240	190	250	14	312	-	-	-	134	-	-	-	-	-	255	292	565	107	47
50-125/40/P	A	65	50	100	50	167	14	132	160	100	70	240	190	250	14	340	-	-	-	154	-	-	-	-	-	255	292	586	107	50
50-125/55/P	A	65	50	100	50	194	14	132	160	100	70	240	190	300	14	401	-	-	-	168	-	-	-	-	-	300	318	669	107	65
50-125/75/P	A	65	50	100	50	194	14	132	160	100	70	240	190	300	14	399	-	-	-	191	-	-	-	-	-	300	341	661	107	82
50-160/55/P	A	65	50	100	50	192	14	160	180	100	70	265	212	300	14	399	-	-	-	168	-	-	-	-	-	300	340	667	103	67
50-160/75/P	A	65	50	100	50	192	14	160	180	100	70	265	212	300	14	397	-	-	-	191	-	-	-	-	-	300	351	659	103	84
50-160/110A/P	B	65	50	100	50	222	14	160	180	100	70	265	212	350	14	330	254	49	304	240	210	304	160	5	15	350	420	816	103	118
50-160/110/P	B	65	50	100	50	222	14	160	180	100	70	265	212	350	14	330	254	49	304	240	210	304	160	5	15	350	420	816	103	122
50-200/110A/P	B	65	50	100	50	222	14	160	200	100	70	265	212	350	14	332	254	49	304	240	210	304	160	5	15	350	380	816	98	118
50-200/110/P	B	65	50	100	50	222	14	160	200	100	70	265	212	350	14	332	254	49	304	240	210	304	160	5	15	350	380	816	98	122
50-200/150/P	B	65	50	100	50	222	14	160	200	100	70	265	212	350	14	332	254	49	304	240	210	304	160	5	15	350	420	816	98	139
50-200/185/P	B	65	50	100	50	222	14	160	200	100	70	265	212	350	14	332	254	49	304	240	254	304	160	5	15	350	420	816	98	149
50-250/150/P	B	65	50	100	65	222	16	180	225	125	95	320	250	350	14	330	254	49	304	240	210	304	160	5	15	352	420	816	110	145
50-250/185/P	B	65	50	100	65	222	16	180	225	125	95	320	250	350	14	330	254	49	304	240	254	304	160	5	15	352	420	816	110	155
50-250/220/P	B	65	50	100	65	222	16	180	225	125	95	320	250	350	14	330	254	49	304	240	254	304	160	5	15	352	420	816	110	166
50-250/300/W	C	65	50	100	65	228	16	180	225	125	95	320	250	400	14	361	318	82	385	317	305	370	200	30	18	402	517	985	110	260
50-315/370/W	B	65	50	125	65	246	14	225	280	125	95	345	280	400	15	379	318	82	385	317	305	370	200	30	19	413	542	1028	140	339
50-315/450/W	B	65	50	125	65	246	14	225	280	125	95	345	280	450	15	395	356	80	436	384	311	412	225	34	19	450	609	1117	140	474
50-315/550/W	C	65	50	125	65	276	14	225	280	125	95	345	280	550	15	444	406	100	506	402	349	467	250	43	24	550	682	1226	140	537
50-315/750/W	C	65	50	125	65	276	14	225	280	125	95	345	280	550	15	466	457	100	557	472	368	517	280	42	24	550	752	1332	140	737

For shims and supports see accessories section.

nscs-32-40-50_2p50-en_e_td

NOTE: Pumps with flanges according to EN 1092-2 as standard; available ASME B16.5 version on request.

NSCS 65, 80 SERIES
DIMENSIONS AND WEIGHTS AT 50 Hz, 2 POLES

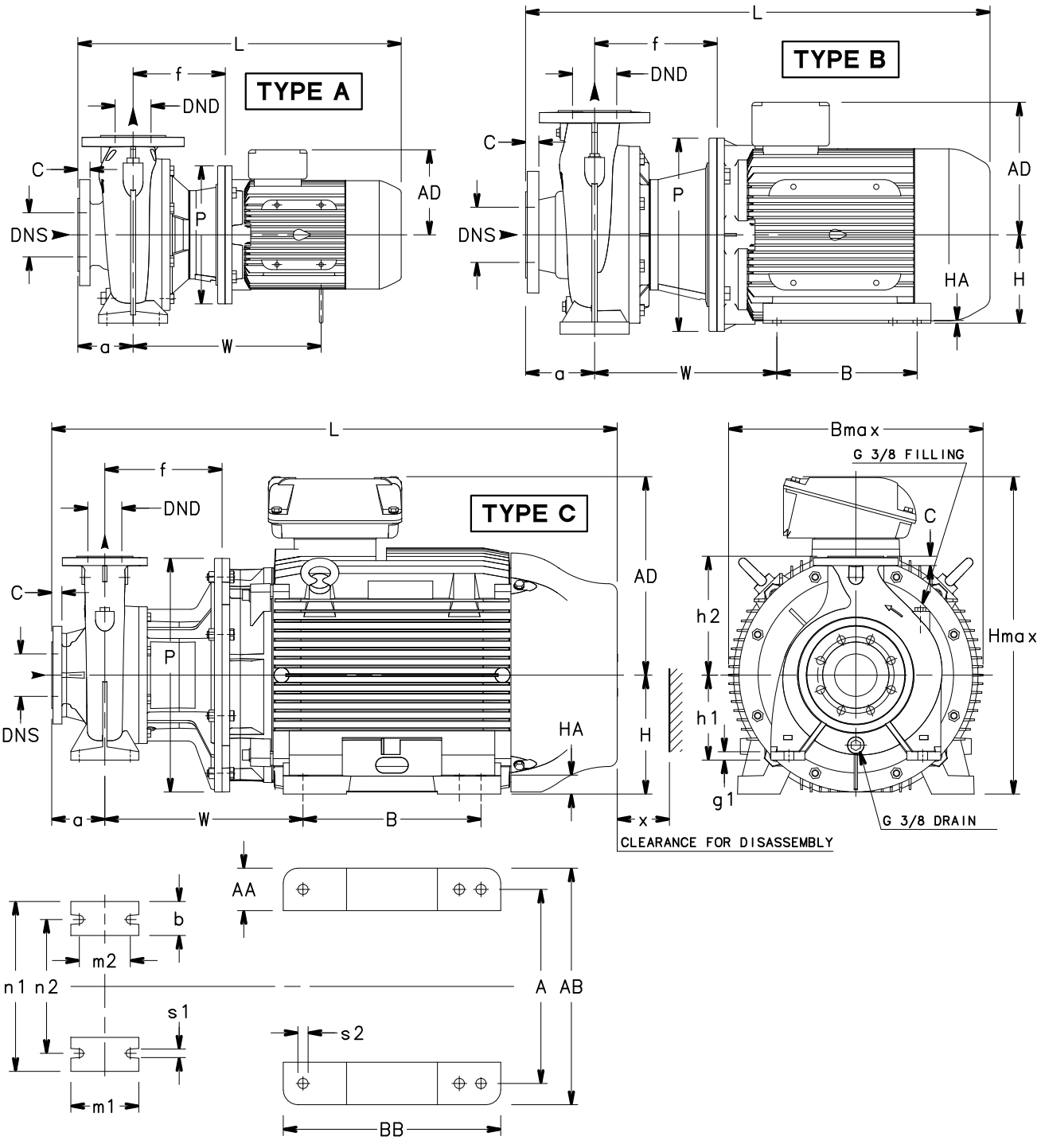

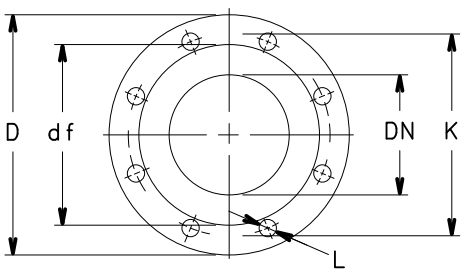

FLANGES

EN1092-2, PN 16 *)						ASME B16.5, Class 150 RF *)					
DN	D	K	C	df	L	DN	D	K	C	df	L
65	185	145	20	118	4x19	2 1/2	185	139.5	20	105	4x19
80	200	160	22	132	8x19	3	200	152.5	22	127	8x19
100	230	180	24	157	8x19	4	230	190.5	24	157	8x19

*)...VALUE "C" AND "D" MAY VARY FROM STANDARD.

A0013-EN_C_DD

LOWARA
a xylem brand

NSCS 65, 80 SERIES
DIMENSIONS AND WEIGHTS AT 50 Hz, 2 POLES

PUMP TYPE NSCS..2	TYPE	DIMENSIONS (mm)																												WEIGHT
		PUMP															MOTOR									B	H	L	x	
		DNS	DND	a	b	f	g1	h1	h2	m1	m2	n1	n2	P	s1	W	A	AA	AB	AD	B	BB	H	HA	s2	max	max			kg
65-125/40/P	A	80	65	100	65	167	16	160	180	125	95	280	212	250	14	340	-	-	-	154	-	-	-	-	-	300	340	586	100	62
65-125/55/P	A	80	65	100	65	194	16	160	180	125	95	280	212	300	14	401	-	-	-	168	-	-	-	-	-	300	340	669	100	72
65-125/75/P	A	80	65	100	65	194	16	160	180	125	95	280	212	300	14	401	-	-	-	191	-	-	-	-	-	300	351	661	100	90
65-125/110A/P	B	80	65	100	65	224	16	160	180	125	95	280	212	350	14	332	254	49	304	240	210	304	160	5	15	350	420	818	100	95
65-125/110/P	B	80	65	100	65	224	16	160	180	125	95	280	212	350	14	332	254	49	304	240	210	304	160	5	15	350	420	818	100	99
65-160/75/P	A	80	65	100	65	192	16	160	200	125	95	280	212	300	14	399	-	-	-	191	-	-	-	-	-	335	360	659	108	93
65-160/110A/P	B	80	65	100	65	222	16	160	200	125	95	280	212	350	14	330	254	49	304	240	210	304	160	5	15	350	420	816	108	126
65-160/110/P	B	80	65	100	65	222	16	160	200	125	95	280	212	350	14	330	254	49	304	240	210	304	160	5	15	350	420	816	108	131
65-160/150/P	B	80	65	100	65	222	16	160	200	125	95	280	212	350	14	330	254	49	304	240	210	304	160	5	15	350	420	816	108	146
65-160/185/P	B	80	65	100	65	222	16	160	200	125	95	280	212	350	14	330	254	49	304	240	254	304	160	5	15	350	420	816	108	155
65-200/110/P	B	80	65	100	65	222	16	180	225	125	95	320	250	350	14	330	254	49	304	191	210	304	160	5	15	350	405	816	118	136
65-200/150/P	B	80	65	100	65	222	16	180	225	125	95	320	250	350	14	330	254	49	304	240	210	304	160	5	15	350	420	816	118	151
65-200/185/P	B	80	65	100	65	222	16	180	225	125	95	320	250	350	14	330	254	49	304	240	254	304	160	5	15	350	420	816	118	161
65-200/220/P	B	80	65	100	65	222	16	180	225	125	95	320	250	350	14	330	254	49	304	240	254	304	160	5	15	350	420	816	118	172
65-200/300/W	C	80	65	100	65	228	16	180	225	125	95	320	250	400	14	361	318	82	385	317	305	370	200	30	18	400	517	985	118	290
65-250/220/P	B	80	65	100	80	240	21	200	250	160	120	360	280	350	20	348	254	49	304	240	254	304	160	5	15	365	450	834	130	175
65-250/300/W	B	80	65	100	80	246	21	200	250	160	120	360	280	400	20	379	318	82	385	317	305	370	200	30	18	402	517	1003	130	275
65-250/370/W	B	80	65	100	80	246	21	200	250	160	120	360	280	400	20	379	318	82	385	317	305	370	200	30	18	402	517	1003	130	290
65-250/450/W	C	80	65	100	80	246	21	200	250	160	120	360	280	450	20	395	356	80	436	384	311	412	225	34	18	455	609	1092	130	435
65-250/550/W	C	80	65	100	80	276	21	200	250	160	120	360	280	550	20	444	406	100	506	402	349	467	250	43	24	550	682	1201	130	520
65-315/550/W	C	80	65	125	80	276	20	225	280	160	120	400	315	550	19	444	406	100	506	402	349	467	250	43	24	550	682	1226	140	544
65-315/750/W	C	80	65	125	80	276	20	225	280	160	120	400	315	550	19	466	457	100	557	472	368	517	280	42	24	550	752	1332	140	745
65-315/900/W	C	80	65	125	80	276	20	225	280	160	120	400	315	550	19	466	457	100	557	472	419	517	280	42	24	550	752	1332	140	825
80-160/110/P	B	100	80	125	65	222	16	180	225	125	95	320	250	350	14	330	254	49	304	191	210	304	160	5	15	350	405	841	122	145
80-160/150/P	B	100	80	125	65	222	16	180	225	125	95	320	250	350	14	330	254	49	304	240	210	304	160	5	15	350	420	841	122	160
80-160/185/P	B	100	80	125	65	222	16	180	225	125	95	320	250	350	14	330	254	49	304	240	254	304	160	5	15	350	420	841	122	170
80-160/220/P	B	100	80	125	65	222	16	180	225	125	95	320	250	350	14	330	254	49	304	240	254	304	160	5	15	350	420	841	122	181
80-200/220/P	B	100	80	125	65	240	16	180	250	125	95	345	280	350	14	348	254	49	304	240	254	304	160	5	15	358	430	859	151	180
80-200/300/W	C	100	80	125	65	246	16	180	250	125	95	345	280	400	14	379	318	82	385	317	305	370	200	30	18	402	517	1028	151	280
80-200/370/W	C	100	80	125	65	246	16	180	250	125	95	345	280	400	14	379	318	82	385	317	305	370	200	30	18	402	517	1028	151	295
80-200/450/W	C	100	80	125	65	246	16	180	250	125	95	345	280	450	14	395	356	80	436	384	311	412	225	34	18	455	609	1117	151	440
80-250/370/W	B	100	80	125	80	246	21	200	280	160	120	400	315	400	20	379	318	82	385	317	305	370	200	30	18	402	517	1028	152	310
80-250/450/W	C	100	80	125	80	246	21	200	280	160	120	400	315	450	20	379	356	80	436	384	311	412	225	34	18	455	609	1117	152	450
80-250/550/W	C	100	80	125	80	276	21	200	280	160	120	400	315	550	20	444	406	100	506	402	349	467	250	43	24	550	682	1226	152	535
80-250/750/W	C	100	80	125	80	276	21	200	280	160	120	400	315	550	20	466	457	100	557	472	419	517	280	42	24	550	752	1332	152	849

For shims and supports see accessories section.

nscs-65-80_2p50-en_e_td

NOTE: Pumps with flanges according to EN 1092-2 as standard; available ASME B16.5 version on request.

NSCS 100, 125 SERIES
DIMENSIONS AND WEIGHTS AT 50 Hz, 2 POLES

TYPE B

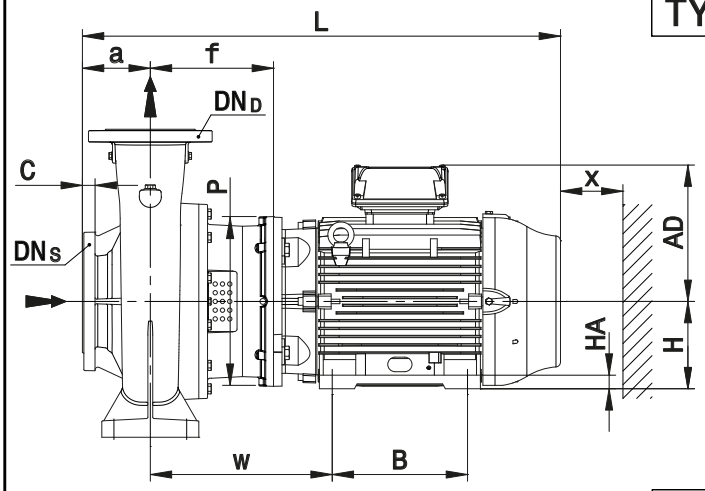

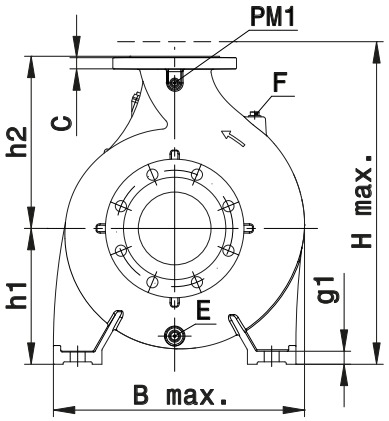

TYPE C

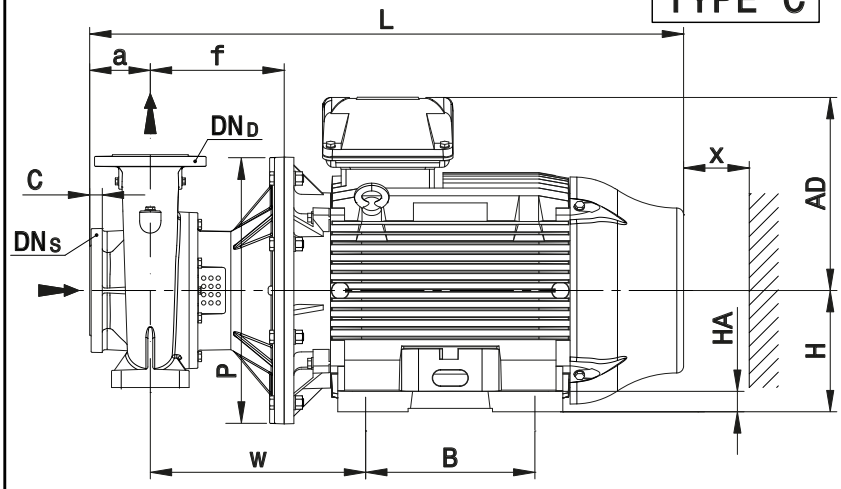

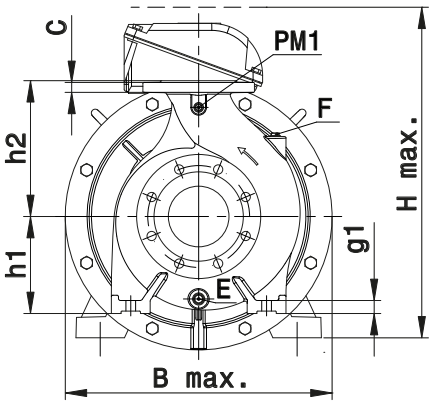

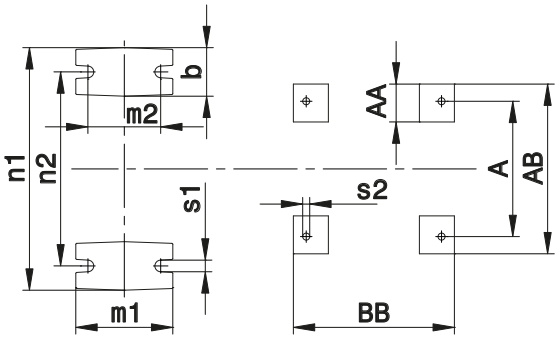

PM1..Pressure gauge connector
E....Drain
F....Filling
*)...Value C and D may vary from standard

Connections		
	$DN_D \leq 150$	$DN_D \geq 200$
PM1	1/4"	1/2"
E	3/8"	1/2"
F	3/8"	-

Flange

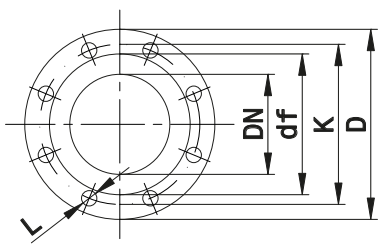

EN1092-2, PN 16 *)						ASME B16.5, Class 150 RF *)					
DN	D	K	C	df	L	DN	D	K	C	df	L
50	165	125	20	99	4x19	2	165	120,5	20	92	4x18
65	185	145	20	118	4x19	2 1/2	185	139,5	20	105	4x18
80	200	160	22	132	8x19	3	200	152,5	22	127	4x18
100	230	180	24	157	8x19	4	230	190,5	24	157	8x18
125	255	210	26	184	8x19	5	255	216	26	186	8x22
150	285	240	26	211	8x23	6	285	241,5	26	216	8x22

NSCS_2p-EN_C_DD

LOWARA
a xylem brand

NSCS 100, 125 SERIES
DIMENSIONS AND WEIGHTS AT 50 Hz, 2 POLES

PUMP TYPE NSCS..2	TYPE	DIMENSIONS (mm)																												WEIGHT
		PUMP																MOTOR									B	H		(kg)
		DNS	DND	a	b	f	g1	h1	h2	m1	m2	n1	n2	P	s1	W	x	A	AA	AB	AD	B	BB	H	HA	s2	max	max	L	G
100-160/150/P	B	125	100	125	80	240	26	200	280	160	120	360	280	350	19	348	140	254	49	304	240	210	304	160	5	15	388	480	859	182
100-160/185/P	B	125	100	125	80	240	26	200	280	160	120	360	280	350	19	348	140	254	49	304	240	254	304	160	5	15	388	480	859	197
100-160/220/P	B	125	100	125	80	240	26	200	280	160	120	360	280	350	19	348	140	254	49	304	240	254	304	160	5	15	388	480	859	201
100-160/300/W	B	125	100	125	80	246	26	200	280	160	120	360	280	400	19	379	140	318	82	385	317	305	370	200	30	19	400	517	1028	310
100-200/300/W	B	125	100	125	80	246	26	200	280	160	120	360	280	400	19	379	140	318	82	385	317	305	370	200	30	19	400	517	1028	308
100-200/370/W	B	125	100	125	80	246	26	200	280	160	120	360	280	400	19	379	140	318	82	385	317	305	370	200	30	19	400	517	1028	333
100-200/450/W	C	125	100	125	80	246	26	200	280	160	120	360	280	450	19	395	140	356	80	436	384	311	412	225	34	19	450	609	1117	468
100-200/550/W	C	125	100	125	80	276	26	200	280	160	120	360	280	550	19	444	140	406	100	506	402	349	467	250	43	24	550	682	1226	531
100-250/750/W	C	125	100	140	80	276	26	225	280	160	120	400	315	550	19	466	140	457	100	557	472	368	517	280	42	24	550	752	1347	742
100-250/900/W	C	125	100	140	80	276	26	225	280	160	120	400	315	550	19	466	140	457	100	557	472	419	517	280	42	24	550	752	1347	822
125-200/450/W	B	150	125	140	80	246	26	250	315	160	120	400	315	450	19	395	140	356	80	436	384	311	412	225	34	19	468	634	1132	495
125-200/550/W	C	150	125	140	80	276	26	250	315	160	120	400	315	550	19	444	140	406	100	506	402	349	467	250	43	24	550	682	1241	557
125-200/750/W	C	150	125	140	80	276	26	250	315	160	120	400	315	550	19	466	140	457	100	557	472	368	517	280	42	24	550	752	1347	758
125-200/900/W	C	150	125	140	80	276	26	250	315	160	120	400	315	550	19	466	140	457	100	557	472	419	517	280	42	24	550	752	1347	838

For shims and supports see accessories section.

Nscs-100-125_2p50-en_e_td

NOTE: Pumps with flanges according to EN 1092-2 as standard; available ASME B16.5 version on request.

LOWARA
a xylem brand

NSCS 32, 40, 50 SERIES
DIMENSIONS AND WEIGHTS AT 50 Hz, 4 POLES

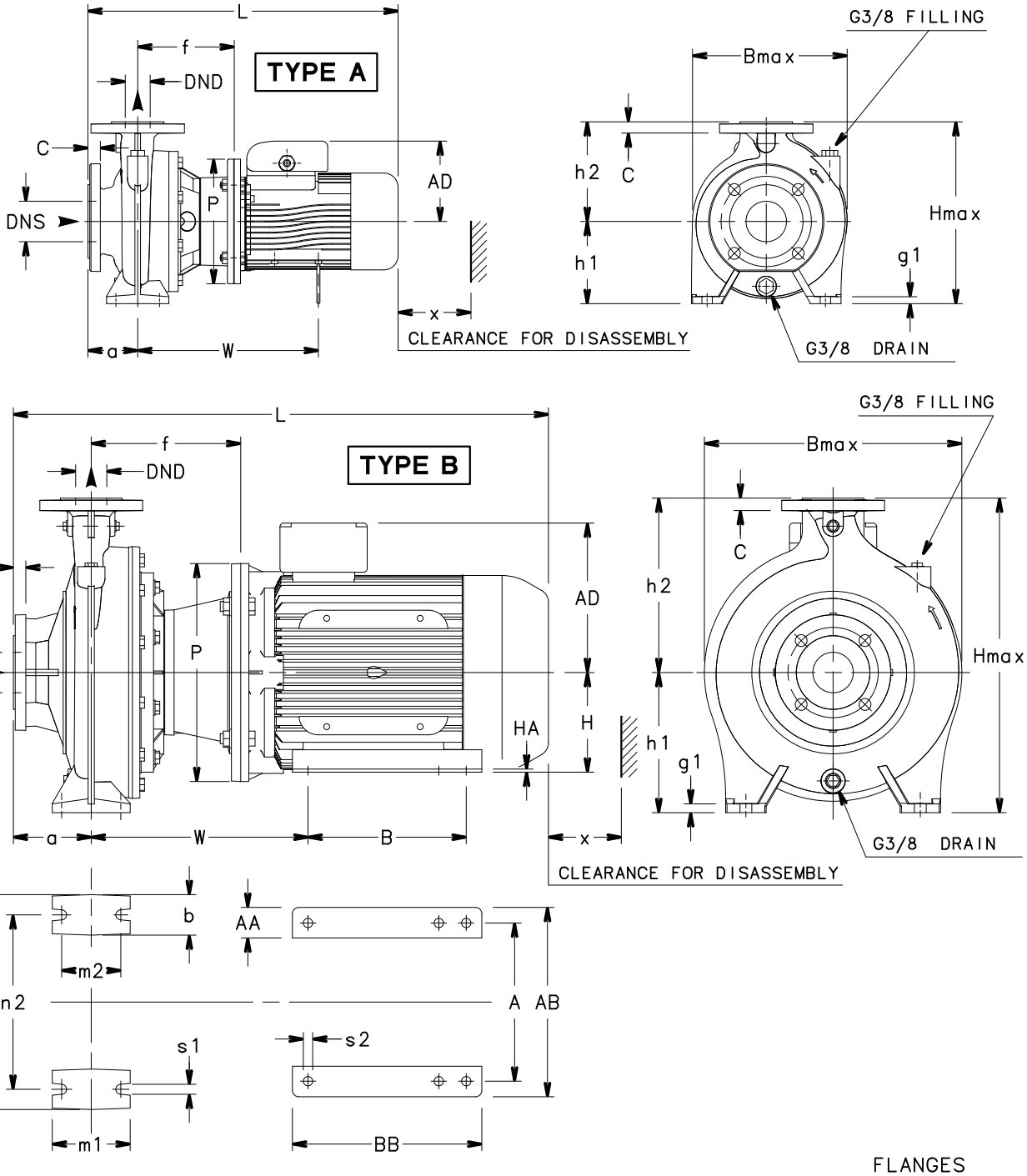

FLANGES

EN1092-2, PN 16 *)						ASME B16.5, Class 150 RF *)					
DN	D	K	C	df	L	DN	D	K	C	df	L
32	140	100	18	76	4x19	1 1/4	140	89	18	63.5	4x19
40	150	110	18	84	4x19	1 1/2	150	98.5	18	73	4x19
50	165	125	20	99	4x19	2	165	120.5	20	92	4x19
65	185	145	20	118	4x19	2 1/2	185	139.5	20	105	4x19

*)...VALUE "C" AND "D" MAY VARY FROM STANDARD.

A0014-EN_B_DD

LOWARA
a xylem brand

NSCS 32, 40, 50 SERIES
DIMENSIONS AND WEIGHTS AT 50 Hz, 4 POLES

PUMP TYPE NSCS..4	TYPE	DIMENSIONS (mm)																													WEIGHT
		PUMP															MOTOR											B	H	L	x	
		DNS	DND	a	b	f	g1	h1	h2	m1	m2	n1	n2	P	s1	W	A	AA	AB	AD	B	BB	H	HA	s2	max	max			kg
32-160/05A/S	A	50	32	80	50	155	14	132	160	100	70	240	190	200	14	290	-	-	-	129	-	-	-	-	-	248	292	498	86	32
32-160/05/S	A	50	32	80	50	155	14	132	160	100	70	240	190	200	14	290	-	-	-	129	-	-	-	-	-	248	292	498	86	32
32-200/05A/S	A	50	32	80	50	155	14	160	180	100	70	240	190	200	14	290	-	-	-	129	-	-	-	-	-	286	340	498	86	42
32-200/05/S	A	50	32	80	50	155	14	160	180	100	70	240	190	200	14	290	-	-	-	129	-	-	-	-	-	286	340	498	86	42
32-200/07/X	A	50	32	80	50	155	14	160	180	100	70	240	190	200	14	-	-	-	-	128	-	-	-	-	-	286	340	466	86	43
32-200/11/P	A	50	32	80	50	155	14	160	180	100	70	240	190	200	14	300	-	-	-	134	-	-	-	-	-	286	340	533	86	50
32-250/11A/P	A	50	32	100	65	155	21	180	225	125	95	320	250	200	14	245	-	-	-	134	-	-	-	-	-	334	405	553	95	48
32-250/11/P	A	50	32	100	65	155	21	180	225	125	95	320	250	200	14	245	-	-	-	134	-	-	-	-	-	334	405	553	95	48
32-250/15/P	A	50	32	100	65	155	21	180	225	125	95	320	250	200	14	245	-	-	-	134	-	-	-	-	-	334	405	553	95	51
32-250/22/P	A	50	32	100	65	165	21	180	225	125	95	320	250	250	14	285	-	-	-	168	-	-	-	-	-	334	405	587	95	61
40-125/05/S	A	65	40	80	50	155	14	112	140	100	70	210	160	200	14	290	-	-	-	129	-	-	-	-	-	237	252	498	96	32
40-160/05/S	A	65	40	80	50	155	14	132	160	100	70	240	190	200	14	290	-	-	-	129	-	-	-	-	-	250	292	498	92	34
40-160/07/X	A	65	40	80	50	155	14	132	160	100	70	240	190	200	14	-	-	-	-	128	-	-	-	-	-	250	292	466	92	38
40-160/11/P	A	65	40	80	50	155	14	132	160	100	70	240	190	200	14	300	-	-	-	134	-	-	-	-	-	250	292	533	92	44
40-200/07/X	A	65	40	100	50	155	14	160	180	100	70	265	212	200	14	-	-	-	-	128	-	-	-	-	-	290	340	486	90	43
40-200/11/P	A	65	40	100	50	155	14	160	180	100	70	265	212	200	14	300	-	-	-	134	-	-	-	-	-	290	340	553	90	49
40-200/15A/P	A	65	40	100	50	155	14	160	180	100	70	265	212	200	14	300	-	-	-	134	-	-	-	-	-	290	340	553	90	49
40-200/15/P	A	65	40	100	50	155	14	160	180	100	70	265	212	200	14	300	-	-	-	134	-	-	-	-	-	290	340	553	90	52
40-250/11/P	A	65	40	100	65	155	16	180	225	125	95	320	250	200	14	300	-	-	-	134	-	-	-	-	-	338	405	553	104	58
40-250/15/P	A	65	40	100	65	155	16	180	225	125	95	320	250	200	14	300	-	-	-	134	-	-	-	-	-	338	405	553	104	63
40-250/22A/P	A	65	40	100	65	165	16	180	225	125	95	320	250	250	14	350	-	-	-	168	-	-	-	-	-	338	405	587	104	71
40-250/22/P	A	65	40	100	65	165	16	180	225	125	95	320	250	250	14	350	-	-	-	168	-	-	-	-	-	338	405	587	104	71
40-250/30/P	A	65	40	100	65	165	16	180	225	125	95	320	250	250	14	350	-	-	-	168	-	-	-	-	-	338	405	618	104	75
50-125/05/S	A	65	50	100	50	157	14	132	160	100	70	240	190	200	14	292	-	-	-	129	-	-	-	-	-	255	292	520	107	35
50-125/07/X	A	65	50	100	50	157	14	132	160	100	70	240	190	200	14	-	-	-	-	128	-	-	-	-	-	255	292	488	107	39
50-125/11/P	A	65	50	100	50	157	14	132	160	100	70	240	190	200	14	302	-	-	-	134	-	-	-	-	-	255	292	555	107	45
50-160/07/X	A	65	50	100	50	155	14	160	180	100	70	265	212	200	14	-	-	-	-	128	-	-	-	-	-	289	340	486	103	46
50-160/11A/P	A	65	50	100	50	155	14	160	180	100	70	265	212	200	14	300	-	-	-	134	-	-	-	-	-	289	340	553	103	52
50-160/11/P	A	65	50	100	50	155	14	160	180	100	70	265	212	200	14	300	-	-	-	134	-	-	-	-	-	289	340	553	103	52
50-160/15/P	A	65	50	100	50	155	14	160	180	100	70	265	212	200	14	300	-	-	-	134	-	-	-	-	-	289	340	553	103	55
50-200/11/P	A	65	50	100	50	155	14	160	200	100	70	265	212	200	14	247	-	-	-	134	-	-	-	-	-	305	360	553	98	52
50-200/15/P	A	65	50	100	50	155	14	160	200	100	70	265	212	200	14	247	-	-	-	134	-	-	-	-	-	305	360	553	98	55
50-200/22A/P	A	65	50	100	50	165	14	160	200	100	70	265	212	250	14	287	-	-	-	168	-	-	-	-	-	305	360	587	98	65
50-200/22/P	A	65	50	100	50	165	14	160	200	100	70	265	212	250	14	287	-	-	-	168	-	-	-	-	-	305	360	587	98	65
50-250/22A/P	A	65	50	100	65	165	16	180	225	125	95	320	250	250	14	285	-	-	-	168	-	-	-	-	-	352	405	587	110	72
50-250/22/P	A	65	50	100	65	165	16	180	225	125	95	320	250	250	14	285	-	-	-	168	-	-	-	-	-	358	405	587	110	72
50-250/30/P	A	65	50	100	65	165	16	180	225	125	95	320	250	250	14	285	-	-	-	168	-	-	-	-	-	358	405	618	110	76
50-250/40/P	A	65	50	100	65	165	16	180	225	125	95	320	250	250	14	410	-	-	-	168	-	-	-	-	-	358	405	647	110	95
50-315/40/P	A	65	50	125	65	183	14	225	280	125	95	345	280	250	15	428	-	-	-	168	-	-	-	-	-	413	505	706	140	136
50-315/55/P	A	65	50	125	65	210	14	225	280	125	95	345	280	300	15	452	-	-	-	191	-	-	-	-	-	413	505	740	140	141
50-315/75/P	A	65	50	125	65	210	14	225	280	125	95	345	280	300	15	452	-	-	-	191	-	-	-	-	-	413	505	740	140	146
50-315/110/P	B	65	50	125	65	240	14	225	280	125	95	345	280	350	15	348	254	49	304	240	210	304	160	5	15	413	505	859	140	210

For shims and supports see accessories section.

nscs-32-40-50-4p50-en_e_td

NOTE: Pumps with flanges according to EN 1092-2 as standard; available ASME B16.5 version on request.

NSCS 65, 80 SERIES
DIMENSIONS AND WEIGHTS AT 50 Hz, 4 POLES

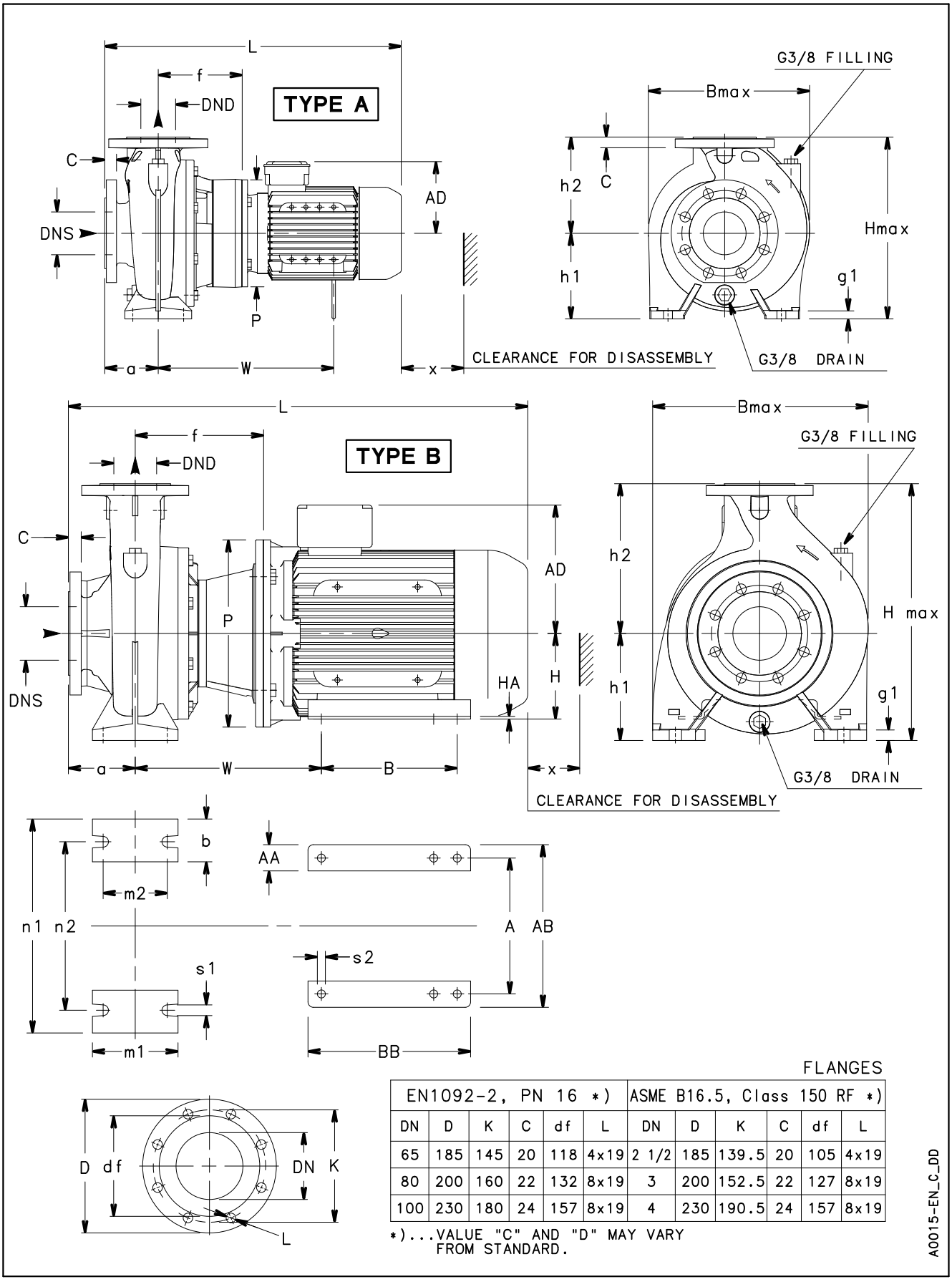

FLANGES

EN1092-2, PN 16 *)						ASME B16.5, Class 150 RF *)					
DN	D	K	C	df	L	DN	D	K	C	df	L
65	185	145	20	118	4x19	2 1/2	185	139.5	20	105	4x19
80	200	160	22	132	8x19	3	200	152.5	22	127	8x19
100	230	180	24	157	8x19	4	230	190.5	24	157	8x19

*)...VALUE "C" AND "D" MAY VARY FROM STANDARD.

A0015-EN_C_DD

LOWARA
a xylem brand

NSCS 65, 80 SERIES
DIMENSIONS AND WEIGHTS AT 50 Hz, 4 POLES

POMPA TIPO NSCS..4	TIPO	DIMENSIONI (mm)																												PESO
		POMPA															MOTORE										B	H	L	x	
		DNS	DND	a	b	f	g1	h1	h2	m1	m2	n1	n2	P	s1	W	A	AA	AB	AD	B	BB	H	HA	s2	max	max			kg
65-125/05/S	A	80	65	100	65	157	16	160	180	125	95	280	212	200	14	292	-	-	-	139	-	-	-	-	-	300	340	520	100	44
65-125/07/X	A	80	65	100	65	157	16	160	180	125	95	280	212	200	14	-	-	-	-	128	-	-	-	-	-	300	340	488	100	48
65-125/11/P	A	80	65	100	65	157	16	160	180	125	95	280	212	200	14	302	-	-	-	134	-	-	-	-	-	300	340	555	100	55
65-125/15/P	A	80	65	100	65	157	16	160	180	125	95	280	212	200	14	302	-	-	-	134	-	-	-	-	-	300	340	555	100	58
65-160/11A/P	A	80	65	100	65	155	16	160	200	125	95	280	212	200	14	300	-	-	-	134	-	-	-	-	-	335	360	553	108	59
65-160/11/P	A	80	65	100	65	155	16	160	200	125	95	280	212	200	14	300	-	-	-	134	-	-	-	-	-	335	360	553	108	59
65-160/15/P	A	80	65	100	65	155	16	160	200	125	95	280	212	200	14	300	-	-	-	134	-	-	-	-	-	335	360	553	108	62
65-160/22A/P	A	80	65	100	65	165	16	160	200	125	95	280	212	250	14	350	-	-	-	168	-	-	-	-	-	335	360	587	108	72
65-160/22/P	A	80	65	100	65	165	16	160	200	125	95	280	212	250	14	350	-	-	-	168	-	-	-	-	-	335	360	587	108	72
65-200/15/P	A	80	65	100	65	155	16	180	225	125	95	320	250	200	14	300	-	-	-	134	-	-	-	-	-	348	405	553	118	65
65-200/22A/P	A	80	65	100	65	165	16	180	225	125	95	320	250	250	14	350	-	-	-	168	-	-	-	-	-	348	405	587	118	75
65-200/22/P	A	80	65	100	65	165	16	180	225	125	95	320	250	250	14	350	-	-	-	168	-	-	-	-	-	348	405	587	118	75
65-200/30/P	A	80	65	100	65	165	16	180	225	125	95	320	250	250	14	350	-	-	-	168	-	-	-	-	-	348	405	618	118	78
65-200/40/P	A	80	65	100	65	165	16	180	225	125	95	320	250	250	14	410	-	-	-	168	-	-	-	-	-	348	405	647	118	97
65-250/30/P	A	80	65	100	80	183	21	200	250	160	120	360	280	250	20	368	-	-	-	168	-	-	-	-	-	367	450	636	130	85
65-250/40/P	A	80	65	100	80	183	21	200	250	160	120	360	280	250	20	428	-	-	-	168	-	-	-	-	-	367	450	665	130	107
65-250/55A/P	A	80	65	100	80	210	21	200	250	160	120	360	280	300	20	453	-	-	-	191	-	-	-	-	-	367	450	715	130	112
65-250/55/P	A	80	65	100	80	210	21	200	250	160	120	360	280	300	20	453	-	-	-	191	-	-	-	-	-	367	450	715	130	112
65-250/75/P	A	80	65	100	80	210	21	200	250	160	120	360	280	300	20	453	-	-	-	191	-	-	-	-	-	367	450	715	130	116
65-315/55/P	A	80	65	125	80	210	20	225	280	160	120	400	315	300	19	452	-	-	-	218	-	-	-	-	-	437	505	707	140	153
65-315/75/P	A	80	65	125	80	210	20	225	280	160	120	400	315	300	19	452	-	-	-	218	-	-	-	-	-	437	505	745	140	164
65-315/110/P	B	80	65	125	80	240	20	225	280	160	120	400	315	350	19	348	254	64	308	264	210	254	160	22	15	437	505	853	140	205
65-315/150/P	B	80	65	125	80	240	20	225	280	160	120	400	315	350	19	348	254	64	308	264	210	298	160	22	15	437	505	897	140	227
80-160/15/P	A	100	80	125	65	155	16	180	225	125	95	320	250	200	14	300	-	-	-	134	-	-	-	-	-	340	405	578	122	72
80-160/22A/P	A	100	80	125	65	165	16	180	225	125	95	320	250	250	14	350	-	-	-	168	-	-	-	-	-	340	405	612	122	82
80-160/22/P	A	100	80	125	65	165	16	180	225	125	95	320	250	250	14	350	-	-	-	168	-	-	-	-	-	340	405	612	122	82
80-160/30/P	A	100	80	125	65	165	16	180	225	125	95	320	250	250	14	350	-	-	-	168	-	-	-	-	-	340	405	643	122	85
80-200/30/P	A	100	80	125	65	183	16	180	250	125	95	345	280	250	14	368	-	-	-	168	-	-	-	-	-	358	430	661	151	87
80-200/40/P	A	100	80	125	65	183	16	180	250	125	95	345	280	250	14	428	-	-	-	168	-	-	-	-	-	358	430	690	151	109
80-200/55A/P	A	100	80	125	65	210	16	180	250	125	95	345	280	300	14	453	-	-	-	191	-	-	-	-	-	358	430	740	151	115
80-200/55/P	A	100	80	125	65	210	16	180	250	125	95	345	280	300	14	453	-	-	-	191	-	-	-	-	-	358	430	740	151	115
80-250/55A/P	A	100	80	125	80	210	21	200	280	160	120	400	315	300	20	453	-	-	-	191	-	-	-	-	-	400	480	740	152	118
80-250/55/P	A	100	80	125	80	210	21	200	280	160	120	400	315	300	20	453	-	-	-	191	-	-	-	-	-	400	480	740	152	118
80-250/75/P	A	100	80	125	80	210	21	200	280	160	120	400	315	300	20	453	-	-	-	191	-	-	-	-	-	400	480	740	152	122
80-250/110/P	B	100	80	125	80	240	21	200	280	160	120	400	315	350	20	348	254	49	304	240	254	304	160	5	15	400	480	859	152	185
80-315/110A/P	B	100	80	125	80	240	26	250	315	160	120	400	315	350	19	348	254	49	304	240	210	304	160	5	15	477	565	859	140	230
80-315/110/P	B	100	80	125	80	240	26	250	315	160	120	400	315	350	19	348	254	49	304	240	210	304	160	5	15	477	565	859	140	230
80-315/150/P	B	100	80	125	80	240	26	250	315	160	120	400	315	350	19	348	254	49	304	240	254	304	160	5	15	477	565	859	140	234
80-315/185/W	B	100	80	125	80	240	26	250	315	160	120	400	315	350	19	361	279	78	350	279	241	294	180	28	15	477	565	919	140	273
80-315/220/W	B	100	80	125	80	240	26	250	315	160	120	400	315	350	19	361	279	78	350	279	279	332	180	28	15	477	565	957	140	290
80-400/185/W	B	100	80	125	80	254	26	280	355	160	120	435	355	350	19	375	279	78	350	279	241	294	180	28	15	539	635	933	140	313
80-400/220/W	B	100	80	125	80	254	26	280	355	160	120	435	355	350	19	375	279	78	350	279	279	332	180	28	15	539	635	971	140	330
80-400/300/W	B	100	80	125	80	254	26	280	355	160	120	435	355	400	19	387	318	82	385	317	305	370	200	30	19	539	635	1036	140	374
80-400/370/W	B	100	80	125	80	284	26	280	355	160	120	435	355	450	19	433	356	80	436	384	286	412	225	34	19	539	664	1155	140	520

Per spessori e supporti vedere sezione accessori.

nscs-65-80-4p50_e_td

NOTA: Pompe con flange in accordo alle norme EN 1092-2; disponibile la versione ASME B16.5 su richiesta.

LOWARA
a xylem brand

NSCS 100, 125, 150, 200, 250 SERIES
DIMENSIONS AND WEIGHTS AT 50 Hz, 4 POLES

TYPE A

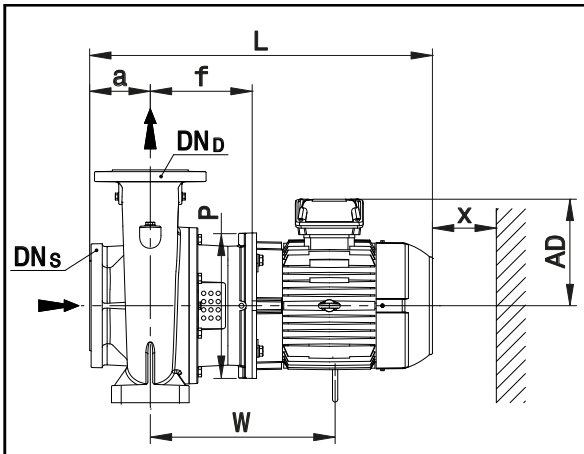

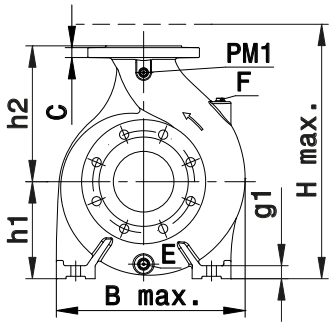

TYPE B

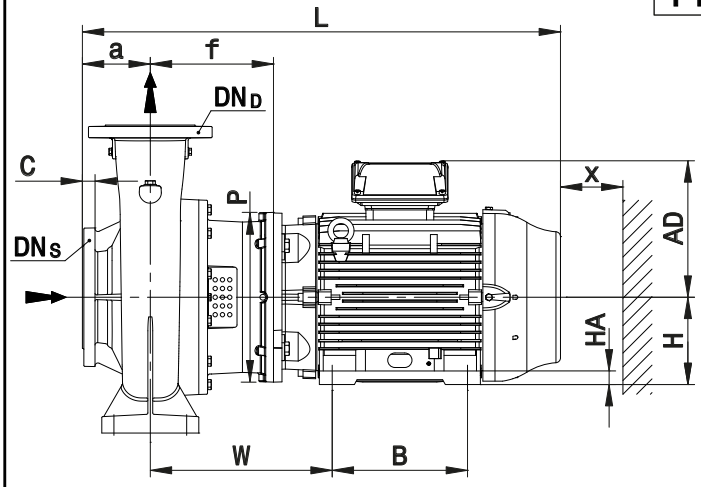

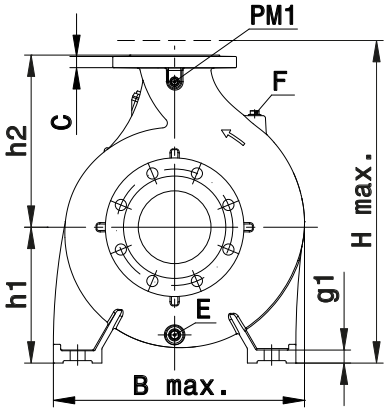

PM1..Pressure gauge connector
E....Drain
F....Filling
*)...Value C and D may vary from standard

Connections		
	$DN_D \leq 150$	$DN_D \geq 200$
PM1	1/4"	1/2"
E	3/8"	1/2"
F	3/8"	-

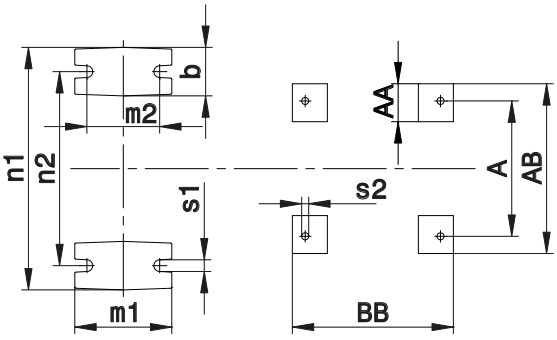

Flange

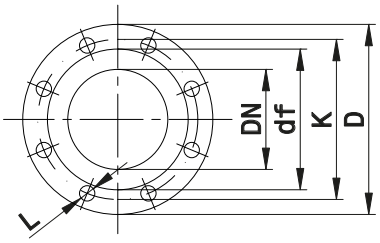

EN1092-2, PN 16 *)						ASME B16.5, Class 150 RF *)					
DN	D	K	C	df	L	DN	D	K	C	df	L
100	230	180	24	157	8x19	4	230	190,5	24	157	8x18
125	255	210	26	184	8x19	5	255	216	26	186	8x22
150	285	240	26	211	8x23	6	285	241,5	26	216	8x22
200	345	295	30	266	12x23	8	345	298,5	30	270	8x22
250	405	355	32	319	12x28	10	405	362	32	324	12x26
300	485	410	32	370	12x28	12	485	432	32	381	12x26

NSCS_4p-EN_C_DD

LOWARA
a xylem brand

NSCS 100, 125, 150, 200, 250 SERIES
DIMENSIONS AND WEIGHTS AT 50 Hz, 4 POLES

PUMP TYPE NSCS..4	TYPE	DIMENSIONS (mm)																												WEIGHT (kg)
		PUMP																MOTOR									B max	H max	L	
		DNS	DND	a	b	f	g1	h1	h2	n1	n2	m1	m2	P	s1	W	x	A	AA	AB	AD	B	BB	H	HA	s2				G
100-160/22A/P	A	125	100	125	80	183	26	200	280	360	280	160	120	250	19	-	140	-	-	-	168	-	-	-	-	-	388	480	630	107
100-160/22/P	A	125	100	125	80	183	26	200	280	360	280	160	120	250	19	-	140	-	-	-	168	-	-	-	-	-	388	480	630	107
100-160/30/P	A	125	100	125	80	183	26	200	280	360	280	160	120	250	19	-	140	-	-	-	168	-	-	-	-	-	388	480	661	114
100-160/40/P	A	125	100	125	80	183	26	200	280	360	280	160	120	250	19	-	140	-	-	-	168	-	-	-	-	-	388	480	706	132
100-200/40/P	A	125	100	125	80	183	26	200	280	360	280	160	120	250	19	-	140	-	-	-	168	-	-	-	-	-	390	480	706	130
100-200/55/P	A	125	100	125	80	210	26	200	280	360	280	160	120	300	19	-	140	-	-	-	191	-	-	-	-	-	390	480	740	134
100-200/75/P	A	125	100	125	80	210	26	200	280	360	280	160	120	300	19	-	140	-	-	-	191	-	-	-	-	-	390	480	740	139
100-250/75/P	A	125	100	140	80	210	26	225	280	400	315	160	120	300	19	-	140	-	-	-	191	-	-	-	-	-	431	505	755	150
100-250/110/P	B	125	100	140	80	240	26	225	280	400	315	160	120	350	19	348	140	254	49	304	240	210	304	160	5	15	431	505	874	215
100-315/110/P	B	125	100	140	80	240	26	250	315	400	315	160	120	350	19	348	140	254	49	304	240	210	304	160	5	15	481	565	874	236
100-315/150/P	B	125	100	140	80	240	26	250	315	400	315	160	120	350	19	348	140	254	49	304	240	210	304	160	5	15	481	565	874	240
100-315/185/W	B	125	100	140	80	240	26	250	315	400	315	160	120	350	19	361	140	279	78	350	279	241	294	180	28	15	481	565	934	279
100-315/220/W	B	125	100	140	80	240	26	250	315	400	315	160	120	350	19	361	140	279	78	350	279	279	332	180	28	15	481	565	972	296
100-315/300/W	B	125	100	140	80	246	26	250	315	400	315	160	120	400	19	379	140	318	82	385	317	305	370	200	30	19	481	565	1043	343
100-400/300/W	B	125	100	140	100	254	26	280	355	500	400	200	150	400	23	387	140	318	82	385	317	305	370	200	30	19	569	635	1051	394
100-400/370/W	B	125	100	140	100	284	26	280	355	500	400	200	150	450	23	433	140	356	80	436	384	286	412	225	34	19	569	664	1170	540
100-400/450/W	B	125	100	140	100	284	26	280	355	500	400	200	150	450	23	433	140	356	80	436	384	311	412	225	34	19	569	664	1170	575
125-200/55/P	A	150	125	140	80	210	26	250	315	400	315	160	120	300	19	-	140	-	-	-	191	-	-	-	-	-	468	565	755	161
125-200/75/P	A	150	125	140	80	210	26	250	315	400	315	160	120	300	19	-	140	-	-	-	191	-	-	-	-	-	468	565	755	166
125-200/110/P	B	150	125	140	80	240	26	250	315	400	315	160	120	350	19	348	140	254	49	304	240	210	304	160	5	15	468	565	874	230
125-250/75/P	A	150	125	140	80	240	26	250	355	400	315	160	120	350	19	-	140	-	-	-	191	-	-	-	-	-	470	605	755	169
125-250/110/P	B	150	125	140	80	240	26	250	355	400	315	160	120	350	19	348	140	254	49	304	240	210	304	160	5	15	470	605	874	233
125-250/150/P	B	150	125	140	80	240	26	250	355	400	315	160	120	350	19	348	140	254	49	304	240	210	304	160	5	15	470	605	874	237
125-315/185/W	B	150	125	140	100	254	26	280	355	500	400	200	150	350	23	375	140	279	78	350	279	241	294	180	28	15	518	635	948	303
125-315/220/W	B	150	125	140	100	254	26	280	355	500	400	200	150	350	23	375	140	279	78	350	279	279	332	180	28	15	518	635	986	320
125-315/300/W	B	150	125	140	100	254	26	280	355	500	400	200	150	400	23	387	140	318	82	385	317	305	370	200	30	19	518	635	1051	364
125-315/370/W	B	150	125	140	100	284	26	280	355	500	400	200	150	450	23	433	140	356	80	436	384	286	412	225	34	19	518	664	1170	510
125-400/370/W	B	150	125	140	100	284	26	315	400	500	400	200	150	450	23	433	140	356	80	436	384	286	412	225	34	19	607	715	1170	558
125-400/450/W	B	150	125	140	100	284	26	315	400	500	400	200	150	450	23	433	140	356	80	436	384	311	412	225	34	19	607	715	1170	593
125-400/550/W	B	150	125	140	100	284	26	315	400	500	400	200	150	550	23	452	140	406	100	506	402	349	467	250	43	24	607	717	1249	642
125-400/750/W	B	150	125	140	100	284	26	315	400	500	400	200	150	550	23	474	140	457	100	557	472	368	517	280	42	24	607	787	1355	834
150-200/110A/P	B	200	150	160	100	240	26	280	400	550	450	200	150	350	23	348	140	254	49	304	240	210	304	160	5	15	602	680	894	285
150-200/110/P	B	200	150	160	100	240	26	280	400	550	450	200	150	350	23	348	140	254	49	304	240	210	304	160	5	15	602	680	894	285
150-200/150A/P	B	200	150	160	100	240	26	280	400	550	450	200	150	350	23	348	140	254	49	304	240	210	304	160	5	15	602	680	894	289
150-200/150/P	B	200	150	160	100	240	26	280	400	550	450	200	150	350	23	348	140	254	49	304	240	210	304	160	5	15	602	680	894	289
150-250/150/P	B	200	150	160	100	254	26	280	400	500	400	200	150	350	23	362	140	254	49	304	240	210	304	160	5	15	567	680	908	293
150-250/185/W	B	200	150	160	100	254	26	280	400	500	400	200	150	350	23	375	140	279	78	350	279	241	294	180	28	15	567	680	968	333
150-250/220/W	B	200	150	160	100	254	26	280	400	500	400	200	150	350	23	375	140	279	78	350	279	279	332	180	28	15	567	680	1006	350
150-250/300/W	B	200	150	160	100	254	26	280	400	500	400	200	150	400	23	387	140	318	82	385	317	305	370	200	30	19	567	680	1071	394
150-315/300/W	B	200	150	160	100	254	26	280	400	550	450	200	150	400	23	387	140	318	82	385	317	305	370	200	30	19	586	680	1071	391
150-315/370/W	B	200	150	160	100	284	26	280	400	550	450	200	150	450	23	433	140	356	80	436	384	286	412	225	34	19	586	680	1190	537
150-315/450/W	B	200	150	160	100	284	26	280	400	550	450	200	150	450	23	433	140	356	80	436	384	311	412	225	34	19	586	680	1190	572
150-400/450/W	B	200	150	160	100	284	26	315	450	550	450	200	150	450	23	433	140	356	80	436	384	311	412	225	34	19	622	765	1190	621
150-400/550/W	B	200	150	160	100	284	26	315	450	550	450	200	150	550	23	452	140	406	100	506	402	349	467	250	43	24	622	765	1269	671
150-400/750/W	B	200	150	160	100	284	26	315	450	550	450	200	150	550	23	474	140	457	100	557	472	368	517	280	42	24	622	787	1375	862
150-400/900/W	B	200	150	160	100	284	26	315	450	550	450	200	150	550	23	474	140	457	100	557	472	419	517	280	42	24	622	787	1375	932
200-250/185/W	B	250	200	180	100	254	26	355	475	550	450	200	150	350	23	375	200	279	78	350	279	241	294	180	28	15	655	830	988	373
200-250/220/W	B	250	200	180	100	254	26	355	475	550	450	200	150	350	23	375	200	279	78	350	279	279	332	180	28	15	655	830	1026	390
200-250/300A/W	B	250	200	180	100	254	26	355	475	550	450	200	150	400	23	387	200	318	82	385	317	305	370	200	30	19	655	830	1091	434
200-250/300/W	B	250	200	180	100	254	26	355	475	550	450	200	150	400	23	387	200	318	82	385	317	305	370	200	30	19	655	830	1091	434
200-315/370/W	B	250	200	180	100	284	26	355	450	550	450	200	150	450	23	433	200	356	80	436	384	286	412	225	34	19	645	805	1210	580
200-315/450/W	B	250	200	180	100	284	26	355	450	550	450	200	150	450	23	433	200	356	80	436	384	311	412	225	34	19	645	805	1210	615
200-315/550/W	B	250	200	180	100	284	26	355	450	550	450	200	150	550	23	452	200	406	100	506	402	349	467	250	43	24	645	805	1289	664
200-315/750/W	B	250	200	180	100	284	26	355	450	550	450	200	150	550	23	474	200	457	100	557	472	368	517	280	42	24	645	827	1395	856
250-315/370/W	B	300	250	250	110	284	35	400	500	710	600	300	250	450	28	433	200	356	80	436	384	286	412	225	34	19	767	900	1280	674
250-315/450/W	B	300	250	250	110	284	35	400	500	710	600	300	250	450	28	433	200	356	80	436	384	311	412	225	34	19	767	900	1280	709
250-315/550/W	B	300	250	250	110	284	35	400	500	710	600	300	250	550	28	452	200	406	100	506	402	349	467	250	43	24	767	900	1359	759
250-315/750/W	B	300	250	250	110	284	35	400	500	710	600	300	250	550	28	474	200	457	100	557	472	368	517	280	42	24	767	900	1465	951

For shims and supports see accessories section.

Nscs-100-250_4p50-en_e_td

NOTE: Pumps with flanges according to EN 1092-2 as standard; available ASME B16.5 version on request.

LOWARA
a xylem brand

NSC 32, 40, 50, 65, 80 SERIES
DIMENSIONS AND WEIGHTS (BARE SHAFT)

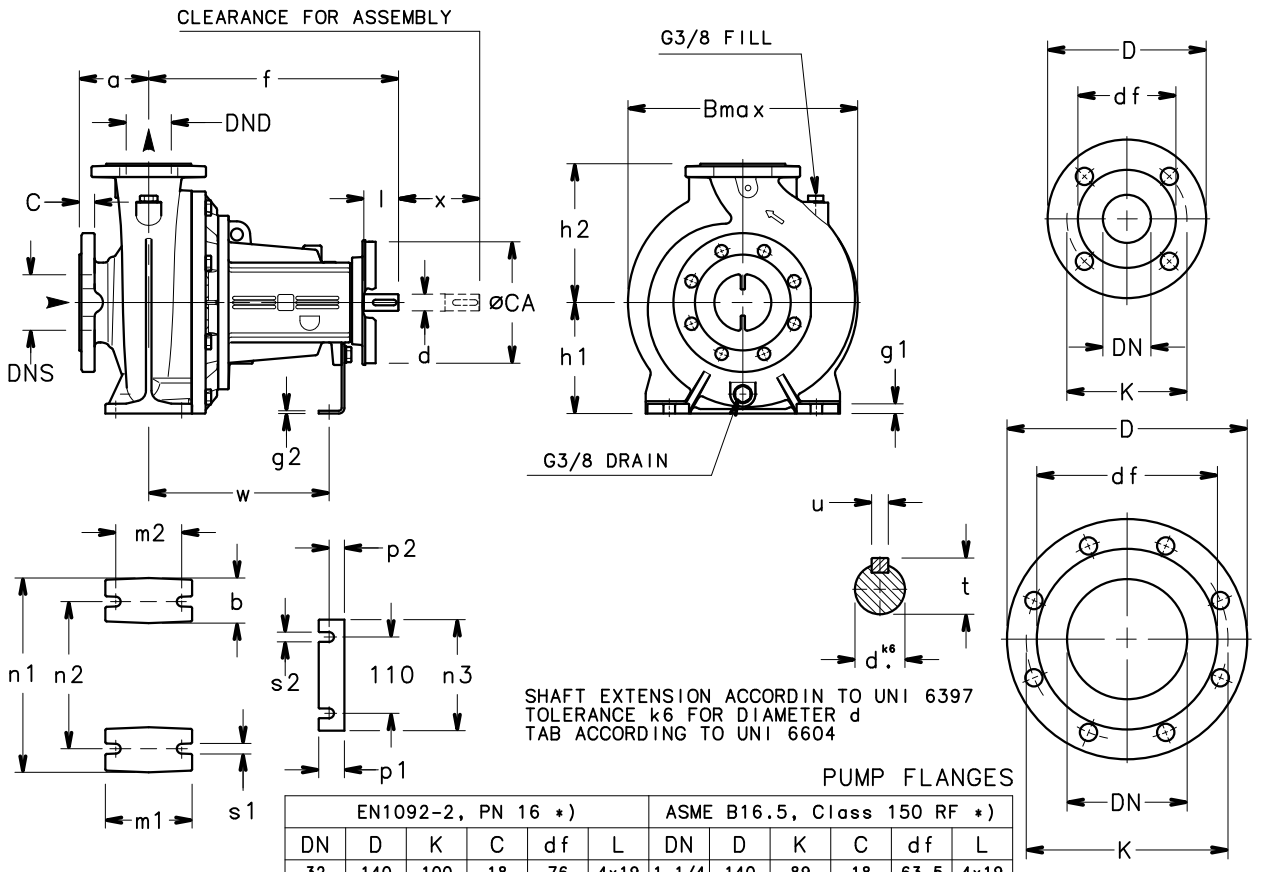

EN1092-2, PN 16 *)						ASME B16.5, Class 150 RF *)					
DN	D	K	C	df	L	DN	D	K	C	df	L
32	140	100	18	76	4x19	1 1/4	140	89	18	63.5	4x19
40	150	110	18	84	4x19	1 1/2	150	98.5	18	73	4x19
50	165	125	20	99	4x19	2	165	120.5	20	92	4x19
65	185	145	20	118	4x19	2 1/2	185	139.5	20	105	4x19
80	200	160	22	132	8x19	3	200	152.5	22	127	8x19
100	230	180	24	157	8x19	4	230	190.5	24	157	8x19

*)...VALUE "C" AND "D" MAY VARY FROM STANDARD.

LOWARA
a xylem brand

NSC 32, 40, 50, 65, 80 SERIES
DIMENSIONS AND WEIGHTS (BARE SHAFT)

PUMP TYPE	DIMENSIONS (mm)																										WEIGHT
NSC	PUMP																				SHAFT				B	x	
(BARE SHAFT)	DNS	DND	a	b	f	g1	g2	h1	h2	m1	m2	n1	n2	n3	p1	p2	s1	s2	W	ØCA	d	l	t	u	max		kg
32-125	50	32	80	50	360	12	4	112	140	100	70	190	140	160	37	22	14	14	260	160	24	50	27	8	239	100	30
32-160	50	32	80	50	360	12	4	132	160	100	70	240	190	160	37	22	14	14	260	160	24	50	27	8	250	100	31
32-200	50	32	80	50	360	12	4	160	180	100	70	240	190	160	37	22	14	14	260	160	24	50	27	8	286	100	38
32-250	50	32	100	65	360	16	4	180	225	125	95	320	250	160	37	22	14	14	260	175	24	50	27	8	343	100	59
40-125	65	40	80	50	360	12	4	112	140	100	70	210	160	160	37	22	14	14	260	160	24	50	27	8	240	100	31
40-160	65	40	80	50	360	12	4	132	160	100	70	240	190	160	37	22	14	14	260	160	24	50	27	8	253	100	32
40-200	65	40	100	50	360	12	4	160	180	100	70	265	212	160	37	22	14	14	260	160	24	50	27	8	294	100	40
40-250	65	40	100	65	360	16	4	180	225	125	95	320	250	160	37	22	14	14	260	175	24	50	27	8	343	100	60
50-125	65	50	100	50	360	12	4	132	160	100	70	240	190	160	37	22	14	14	260	160	24	50	27	8	258	100	34
50-160	65	50	100	50	360	12	4	160	180	100	70	265	212	160	37	22	14	14	260	160	24	50	27	8	290	100	41
50-200	65	50	100	50	360	12	4	160	200	100	70	265	212	160	37	22	14	14	260	160	24	50	27	8	303	100	42
50-250	65	50	100	65	360	16	4	180	225	125	95	320	250	160	37	22	14	14	260	175	24	50	27	8	361	100	61
50-315	65	50	125	65	470	14	5	225	280	125	95	345	280	156	41	24	15	14	340	190	32	80	35	10	414	140	94
65-125	80	65	100	65	360	16	4	160	180	125	95	280	212	160	37	22	14	14	260	160	24	50	27	8	305	100	45
65-160	80	65	100	65	360	16	4	160	200	125	95	280	212	160	37	22	14	14	260	175	24	50	27	8	338	100	60
65-200	80	65	100	65	360	16	4	180	225	125	95	320	250	160	37	22	14	14	260	175	24	50	27	8	350	140	63
65-250	80	65	100	80	470	21	4	200	250	160	120	360	280	160	37	22	20	14	340	190	32	80	35	10	375	140	81
65-315	80	65	125	80	470	20	5	225	280	160	120	400	315	156	41	24	19	14	340	190	32	80	35	10	437	140	102
80-160	100	80	125	65	360	16	4	180	225	125	95	320	250	160	37	22	14	14	260	160	24	50	27	8	343	140	66
80-200	100	80	125	65	470	16	4	180	250	125	95	345	280	160	37	22	14	14	340	190	32	80	35	10	365	140	83
80-250	100	80	125	80	470	21	4	200	280	160	120	400	315	160	37	22	20	14	340	190	32	80	35	10	405	140	86
80-315	100	80	125	80	470	26	5	250	315	160	120	400	315	156	41	24	19	14	340	190	32	80	35	10	478	140	118
80-316	100	80	125	80	530	26	5	250	315	160	120	400	315	156	41	24	19	14	370	230	42	110	45	12	478	140	140
80-400	100	80	125	80	530	26	5	280	355	160	120	435	355	156	41	24	19	14	370	230	42	110	45	12	540	140	154

NOTE: Pumps with flanges according to EN 1092-2 as standard; available ASME B16.5 version on request.

Nsc32-80bs-en_b_td

NSC 100, 125, 150, 200, 250, 300 SERIES
DIMENSIONS AND WEIGHTS (BARE SHAFT)

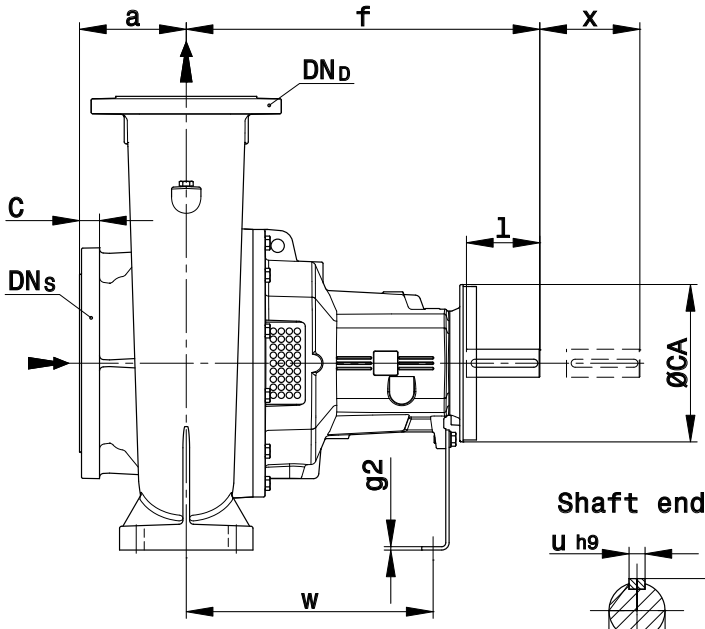

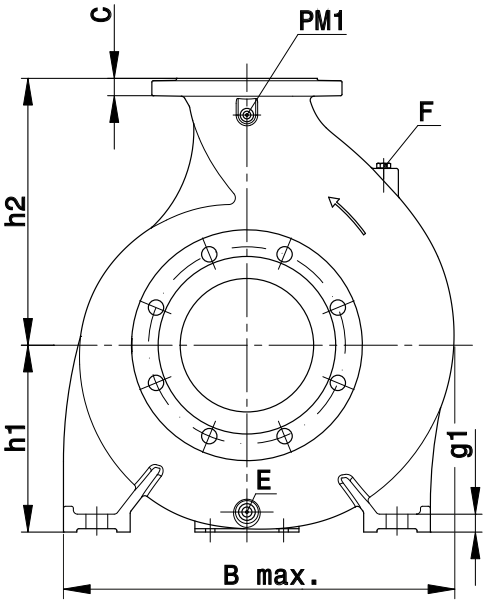

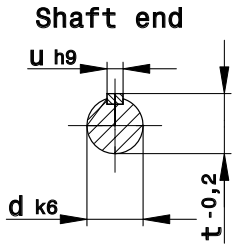

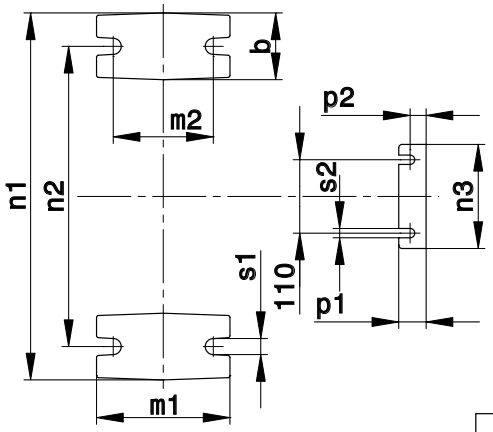

PM1..Pressure gauge connector
E....Drain
F....Filling
*)...Value C and D may vary
from standard

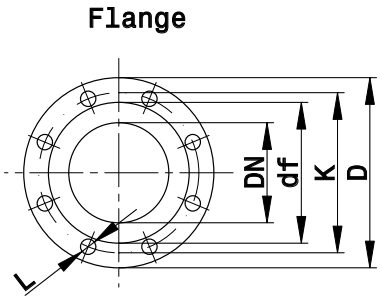

Connections		
	$DN_D \leq 150$	$DN_D \geq 200$
PM1	1/4"	1/2"
E	3/8"	1/2"
F	3/8"	-

EN1092-2, PN 16 *)						ASME B16.5, Class 150 RF *)					
DN	D	K	C	df	L	DN	D	K	C	df	L
100	230	180	24	157	8x19	4	230	190,5	24	157	8x18
125	255	210	26	184	8x19	5	255	216	26	186	8x22
150	285	240	26	211	8x23	6	285	241,5	26	216	8x22
200	345	295	30	266	12x23	8	345	298,5	30	270	8x22
250	405	355	32	319	12x28	10	405	362	32	324	12x26
300	485	410	32	370	12x28	12	485	432	32	381	12x26
350	535	470	36	429	16x28	14	535	476	36	413	12x29

NSC-EN_D_DD

LOWARA
a xylem brand

NSC 100, 125, 150, 200, 250, 300 SERIES
DIMENSIONS AND WEIGHTS (BARE SHAFT)

PUMP TYPE	DIMENSIONS (mm)																										WEIGHT
NSC	PUMP																			SHAFT				B	x	(kg)	
(BARE SHAFT)	DNS	DND	a	b	f	g1	g2	h1	h2	m1	m2	n1	n2	n3	p1	p2	s1	s2	W	ØCA	d	l	t	u	max		G	
100-160	125	100	125	80	470	26	5	200	280	160	120	360	280	156	41	24	19	14	340	190	32	80	35	10	388	140	82	
100-200	125	100	125	80	470	26	5	200	280	160	120	360	280	156	41	24	19	14	340	190	32	80	35	10	390	140	90	
100-250	125	100	140	80	470	26	5	225	280	160	120	400	315	156	41	24	19	14	340	190	32	80	35	10	431	140	100	
100-315	125	100	140	80	470	26	5	250	315	160	120	400	315	156	41	24	19	14	340	190	32	80	35	10	482	140	116	
100-316	125	100	140	80	530	26	5	250	315	160	120	400	315	156	41	24	19	14	370	230	42	110	45	12	482	140	143	
100-400	125	100	140	100	530	26	5	280	355	200	150	500	400	156	41	24	23	14	370	230	42	110	45	12	569	140	178	
125-200	150	125	140	80	470	26	5	250	315	160	120	400	315	156	41	24	19	14	340	190	32	80	35	10	468	140	112	
125-250	150	125	140	80	470	26	5	250	355	160	120	400	315	156	41	24	19	14	340	190	32	80	35	10	470	140	112	
125-315	150	125	140	100	530	26	5	280	355	200	150	500	400	156	41	24	23	14	370	230	42	110	45	12	518	140	152	
125-400	150	125	140	100	530	26	5	315	400	200	150	500	400	156	41	24	23	14	370	230	42	110	45	12	607	140	200	
150-200	200	150	160	100	470	26	5	280	400	200	150	550	450	156	41	24	23	14	340	190	32	80	35	10	603	140	166	
150-250	200	150	160	100	530	26	5	280	400	200	150	500	400	156	41	24	23	14	370	230	42	110	45	12	569	140	180	
150-315	200	150	160	100	530	26	5	280	400	200	150	550	450	156	41	24	23	14	370	230	42	110	45	12	586	140	186	
150-400	200	150	160	100	530	26	5	315	450	200	150	550	450	156	41	24	23	14	370	230	42	110	45	12	621	140	228	
150-500	200	150	180	110	770	35	8	400	500	300	250	710	600	170	58	33	28	18	525	310	60	140	64	18	751	250	408	
200-250	250	200	180	100	530	26	5	355	475	200	150	550	450	156	41	24	23	14	370	230	42	110	45	12	655	200	230	
200-315	250	200	180	100	530	26	5	355	450	200	150	550	450	156	41	24	23	14	370	230	42	110	45	12	645	200	234	
200-400	250	200	180	110	770	35	8	400	500	300	250	710	600	170	58	33	28	18	525	310	60	140	64	18	735	250	363	
200-500	250	200	200	110	770	35	8	450	560	300	250	710	600	170	58	33	28	18	525	310	60	140	64	18	761	250	400	
250-315	300	250	250	110	530	35	5	400	500	300	250	710	600	156	41	24	28	14	370	230	42	110	45	12	767	200	316	
250-400	300	250	200	110	770	35	8	400	560	300	250	710	600	170	58	33	28	18	525	310	60	140	64	18	754	250	400	
250-500	300	250	200	110	770	35	8	450	670	300	250	710	600	170	58	33	28	18	525	310	60	140	64	18	776	250	451	
300-350	350	300	250	130	800	41	8	450	600	350	290	800	670	170	58	33	32	18	555	310	60	140	64	18	895	300	544	
300-400	350	300	250	130	800	41	8	450	600	350	290	800	670	170	58	33	32	18	555	310	60	140	64	18	854	300	548	
300-450	350	300	250	130	800	41	8	475	630	350	290	800	670	170	58	33	32	18	555	310	60	140	64	18	873	300	578	

NOTE: Pumps with flanges according to EN 1092-2 as standard; available ASME B16.5 version on request.

Nsc100-300bs-en_b_td

LOWARA
a xylem brand

NSCF 32 SERIES (MOUNTED ON BASE)
DIMENSIONS AND WEIGHTS AT 50 Hz, 2 POLES

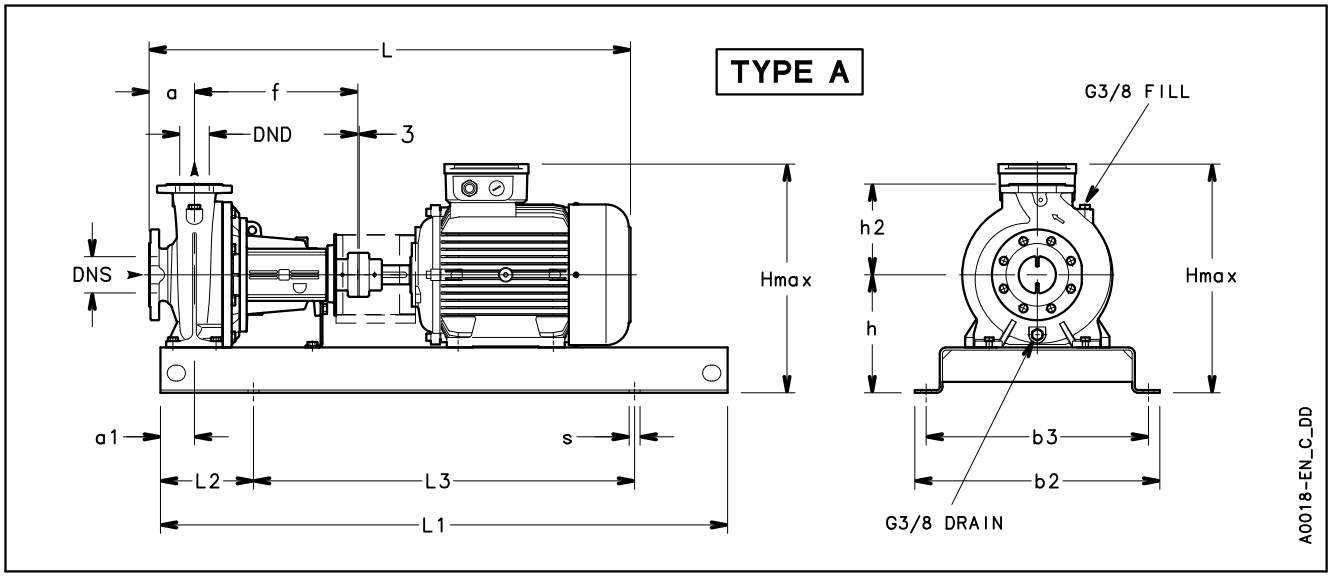

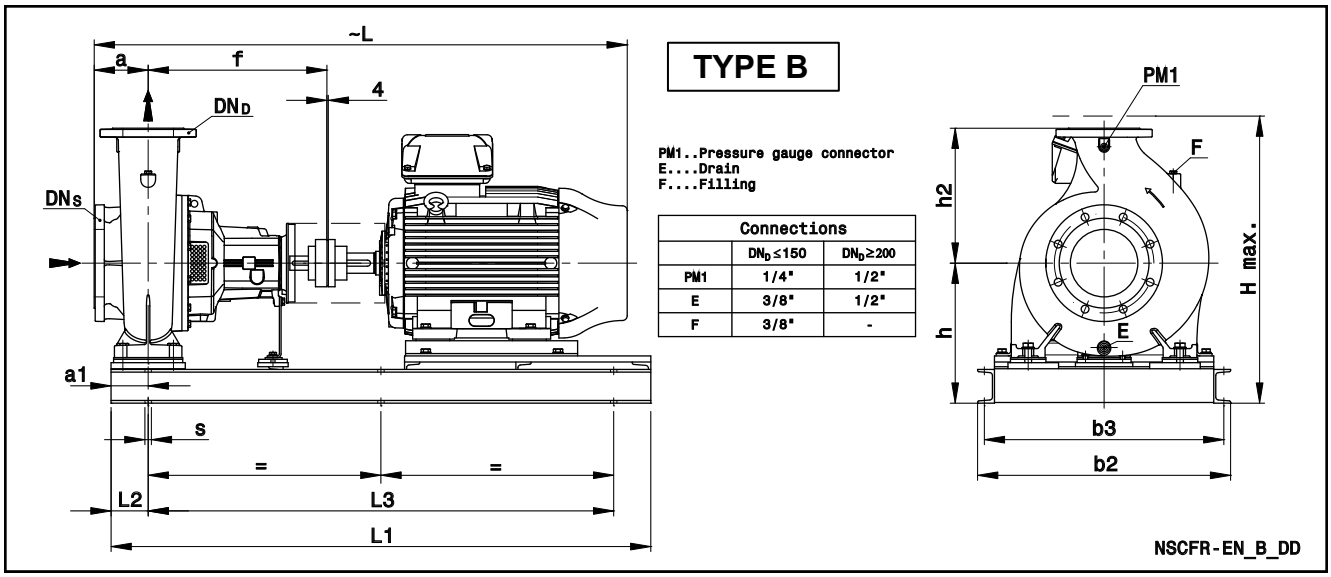

PUMP TYPE NSCF..2	TYPE	DIMENSIONS (mm)															WEIGHT	COUPLING TYPE
		DNS	DND	a	a1	b2	b3	f	h	h2	L	L1	L2	L3	H max	s FOR SCREWS	kg	
32-125/11/S	A	50	32	80	60	360	320	360	212	140	746	800	130	540	352	4xØ19 (M16)	65	B68B
32-125/15/P	A	50	32	80	60	390	350	360	212	140	791	900	150	600	352	4xØ19 (M16)	75	B68C
32-125/22/P	A	50	32	80	60	390	350	360	212	140	791	900	150	600	352	4xØ19 (M16)	77	B68C
32-125/30/P	A	50	32	80	60	390	350	360	212	140	822	900	150	600	366	4xØ19 (M16)	84	B80A
32-160/22/P	A	50	32	80	60	390	350	360	232	160	791	900	150	600	392	4xØ19 (M16)	78	B68C
32-160/30/P	A	50	32	80	60	390	350	360	232	160	822	900	150	600	392	4xØ19 (M16)	85	B80A
32-160/40/P	A	50	32	80	60	390	350	360	232	160	825	900	150	600	400	4xØ19 (M16)	90	B80A
32-160/55/P	A	50	32	80	60	450	400	360	232	160	890	1000	170	660	423	4xØ24 (M20)	119	B95A
32-200/30/P	A	50	32	80	60	390	350	360	260	180	822	900	150	600	440	4xØ19 (M16)	92	B80A
32-200/40/P	A	50	32	80	60	390	350	360	260	180	825	900	150	600	440	4xØ19 (M16)	97	B80A
32-200/55/P	A	50	32	80	60	450	400	360	260	180	890	1000	170	660	451	4xØ24 (M20)	126	B95A
32-200/75/P	A	50	32	80	60	450	400	360	260	180	890	1000	170	660	451	4xØ24 (M20)	130	B95A
32-250/75/P	A	50	32	100	75	490	440	360	280	225	910	1120	190	740	505	4xØ24 (M20)	157	B95A
32-250/110A/P	A	50	32	100	75	540	490	360	280	225	1067	1250	205	840	520	4xØ24 (M20)	187	B95B
32-250/110/P	A	50	32	100	75	540	490	360	280	225	1067	1250	205	840	520	4xØ24 (M20)	187	B95B
32-250/150/P	A	50	32	100	75	540	490	360	280	225	1067	1250	205	840	520	4xØ24 (M20)	204	B95B

NOTE: Pumps with flanges according to EN 1092-2 as standard.

Nscf32_2p50-en_d_td

Available ASME B16.5 version on request. For flanges dimensions see drawing.

LOWARA
a xylem brand

NSCF 40, 50, 65 SERIES (MOUNTED ON BASE)
DIMENSIONS AND WEIGHTS AT 50 Hz, 2 POLES

PUMP TYPE NSCF..2	TYPE	DIMENSIONS (mm)															WEIGHT	COUPLING TYPE
		DNS	DND	a	a1	b2	b3	f	h	h2	L	L1	L2	L3	H max	s FOR SCREWS	kg	
40-125/15/P	A	65	40	80	60	390	350	360	212	140	791	900	150	600	352	4xØ19 (M16)	76	B68C
40-125/22/P	A	65	40	80	60	390	350	360	212	140	791	900	150	600	352	4xØ19 (M16)	78	B68C
40-125/30/P	A	65	40	80	60	390	350	360	212	140	822	900	150	600	366	4xØ19 (M16)	85	B80A
40-125/40/P	A	65	40	80	60	390	350	360	212	140	825	900	150	600	380	4xØ19 (M16)	90	B80A
40-160/30/P	A	65	40	80	60	390	350	360	232	160	822	900	150	600	392	4xØ19 (M16)	86	B80A
40-160/40/P	A	65	40	80	60	390	350	360	232	160	825	900	150	600	400	4xØ19 (M16)	91	B80A
40-160/55/P	A	65	40	80	60	450	400	360	232	160	890	1000	170	660	423	4xØ24 (M20)	120	B95A
40-160/75/P	A	65	40	80	60	450	400	360	232	160	890	1000	170	660	423	4xØ24 (M20)	124	B95A
40-200/55/P	A	65	40	100	60	450	400	360	260	180	910	1000	170	660	451	4xØ24 (M20)	128	B95A
40-200/75/P	A	65	40	100	60	450	400	360	260	180	910	1000	170	660	451	4xØ24 (M20)	132	B95A
40-200/110A/P	A	65	40	100	60	490	440	360	260	180	1067	1120	190	740	500	4xØ24 (M20)	161	B95B
40-200/110/P	A	65	40	100	60	490	440	360	260	180	1067	1120	190	740	500	4xØ24 (M20)	161	B95B
40-250/110A/P	A	65	40	100	75	540	490	360	280	225	1067	1250	205	840	520	4xØ24 (M20)	188	B95B
40-250/110/P	A	65	40	100	75	540	490	360	280	225	1067	1250	205	840	520	4xØ24 (M20)	188	B95B
40-250/150/P	A	65	40	100	75	540	490	360	280	225	1067	1250	205	840	520	4xØ24 (M20)	205	B95B
40-250/185/P	A	65	40	100	75	540	490	360	280	225	1067	1250	205	840	520	4xØ24 (M20)	218	B95B
40-250/220/W	A	65	40	100	75	540	490	360	280	225	1127	1250	205	840	559	4xØ24 (M20)	285	B110A
50-125/30/P	A	65	50	100	60	390	350	360	232	160	842	900	150	600	392	4xØ19 (M16)	88	B80A
50-125/40/P	A	65	50	100	60	390	350	360	232	160	845	900	150	600	400	4xØ19 (M16)	93	B80A
50-125/55/P	A	65	50	100	60	450	400	360	232	160	910	1000	170	660	423	4xØ24 (M20)	122	B95A
50-125/75/P	A	65	50	100	60	450	400	360	232	160	910	1000	170	660	423	4xØ24 (M20)	126	B95A
50-160/55/P	A	65	50	100	60	450	400	360	260	180	910	1000	170	660	451	4xØ24 (M20)	129	B95A
50-160/75/P	A	65	50	100	60	450	400	360	260	180	910	1000	170	660	451	4xØ24 (M20)	133	B95A
50-160/110A/P	A	65	50	100	60	490	440	360	260	180	1067	1120	190	740	500	4xØ24 (M20)	162	B95B
50-160/110/P	A	65	50	100	60	490	440	360	260	180	1067	1120	190	740	500	4xØ24 (M20)	162	B95B
50-200/110A/P	A	65	50	100	60	490	440	360	260	200	1067	1120	190	740	500	4xØ24 (M20)	163	B95B
50-200/110/P	A	65	50	100	60	490	440	360	260	200	1067	1120	190	740	500	4xØ24 (M20)	163	B95B
50-200/150/P	A	65	50	100	60	490	440	360	260	200	1067	1120	190	740	500	4xØ24 (M20)	180	B95B
50-200/185/P	A	65	50	100	60	490	440	360	260	200	1067	1120	190	740	500	4xØ24 (M20)	193	B95B
50-250/150/P	A	65	50	100	75	540	490	360	280	225	1067	1250	205	840	520	4xØ24 (M20)	206	B95B
50-250/185/P	A	65	50	100	75	540	490	360	280	225	1067	1250	205	840	520	4xØ24 (M20)	219	B95B
50-250/220/W	A	65	50	100	75	540	490	360	280	225	1127	1250	205	840	559	4xØ24 (M20)	286	B110A
50-250/300/W	A	65	50	100	75	610	550	360	310	225	1230	1400	230	940	627	4xØ28 (M24)	368	B125D
50-315/370/W	B	65	50	125	110	560	520	470	355	280	1366	1350	110	1130	672	6xØ19 (M16)	462	B125B
50-315/450/W	B	65	50	125	110	560	520	470	355	280	1455	1350	110	1130	739	6xØ19 (M16)	607	B125B
50-315/550/W	B	65	50	125	110	750	710	470	405	280	1564	1550	110	1330	807	6xØ19 (M16)	733	B140A
50-315/750/W	B	65	50	125	110	750	710	470	405	280	1670	1550	110	1330	877	6xØ19 (M16)	960	B160A
65-125/40/P	A	80	65	100	75	390	350	360	260	180	845	900	150	600	440	4xØ19 (M16)	104	B80A
65-125/55/P	A	80	65	100	75	450	400	360	260	180	910	1000	170	660	451	4xØ24 (M20)	133	B95A
65-125/75/P	A	80	65	100	75	450	400	360	260	180	910	1000	170	660	451	4xØ24 (M20)	137	B95A
65-125/110A/P	A	80	65	100	75	490	440	360	260	180	1067	1120	190	740	500	4xØ24 (M20)	167	B95B
65-125/110/P	A	80	65	100	75	490	440	360	260	180	1067	1120	190	740	500	4xØ24 (M20)	167	B95B
65-160/75/P	A	80	65	100	75	450	400	360	260	200	910	1000	170	660	460	4xØ24 (M20)	158	B95A
65-160/110A/P	A	80	65	100	75	540	490	360	260	200	1067	1250	205	840	500	4xØ24 (M20)	188	B95B
65-160/110/P	A	80	65	100	75	540	490	360	260	200	1067	1250	205	840	500	4xØ24 (M20)	188	B95B
65-160/150/P	A	80	65	100	75	540	490	360	260	200	1067	1250	205	840	500	4xØ24 (M20)	205	B95B
65-160/185/P	A	80	65	100	75	540	490	360	260	200	1067	1250	205	840	500	4xØ24 (M20)	218	B95B
65-200/110/P	A	80	65	100	75	540	490	360	280	225	1067	1250	205	840	520	4xØ24 (M20)	191	B95B
65-200/150/P	A	80	65	100	75	540	490	360	280	225	1067	1250	205	840	520	4xØ24 (M20)	208	B95B
65-200/185/P	A	80	65	100	75	540	490	360	280	225	1067	1250	205	840	520	4xØ24 (M20)	221	B95B
65-200/220/W	A	80	65	100	75	540	490	360	280	225	1127	1250	205	840	559	4xØ24 (M20)	288	B110A
65-200/300/W	A	80	65	100	75	610	550	360	310	225	1230	1400	230	940	627	4xØ28 (M24)	370	B125D
65-250/220/W	A	80	65	100	90	540	490	470	310	250	1237	1250	205	840	589	4xØ24 (M20)	306	B110B
65-250/300/W	A	80	65	100	90	610	550	470	310	250	1340	1400	230	940	627	4xØ28 (M24)	388	B125B
65-250/370/W	A	80	65	100	90	610	550	470	310	250	1340	1400	230	940	627	4xØ28 (M24)	409	B125B
65-250/450/W	A	80	65	100	90	610	550	470	365	250	1429	1400	230	940	749	4xØ28 (M24)	560	B125B
65-250/550/W	A	80	65	100	90	660	600	470	390	250	1538	1600	270	1060	792	4xØ28 (M24)	669	B140A
65-315/550/W	B	80	65	125	110	750	710	470	405	280	1564	1550	110	1330	807	6xØ19 (M16)	740	B140A
65-315/750/W	B	80	65	125	110	750	710	470	390	280	1670	1550	110	1330	862	6xØ19 (M16)	958	B160A
65-315/900/W	B	80	65	125	110	750	710	470	390	280	1670	1550	110	1330	862	6xØ19 (M16)	993	B160A

NOTE: Pumps with flanges according to EN 1092-2 as standard.

Nscf40-65-2p50-en_d_td

Available ASME B16.5 version on request. For flanges dimensions see drawing.

NSCF 80, 100, 125 SERIES (MOUNTED ON BASE)
DIMENSIONS AND WEIGHTS AT 50 Hz, 2 POLES

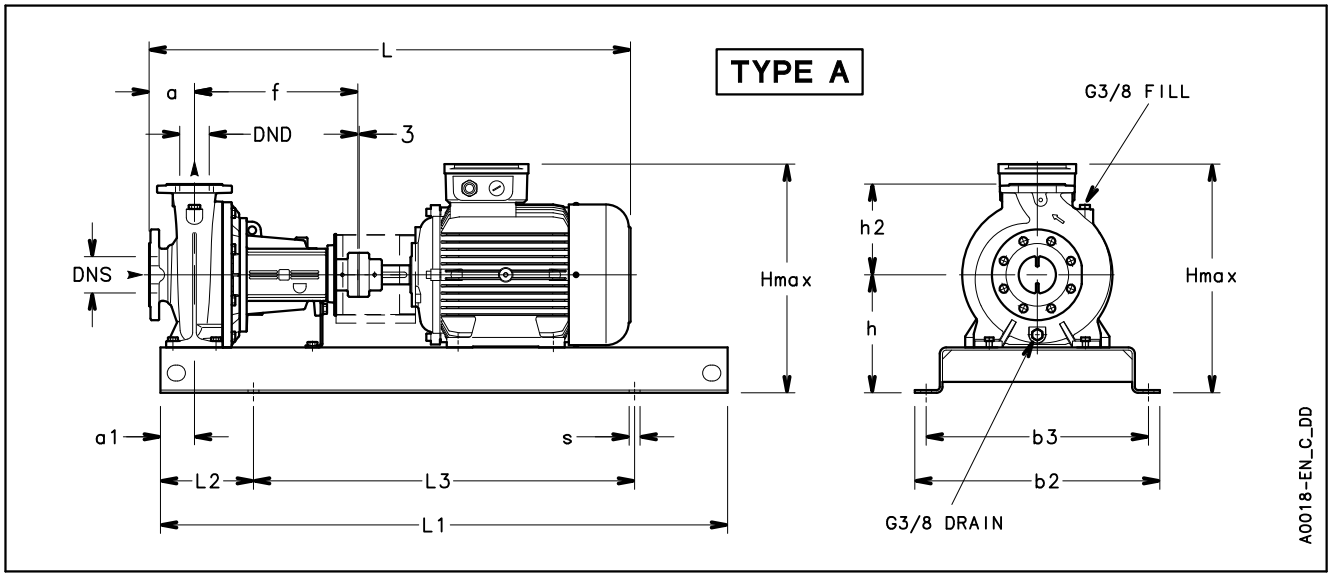

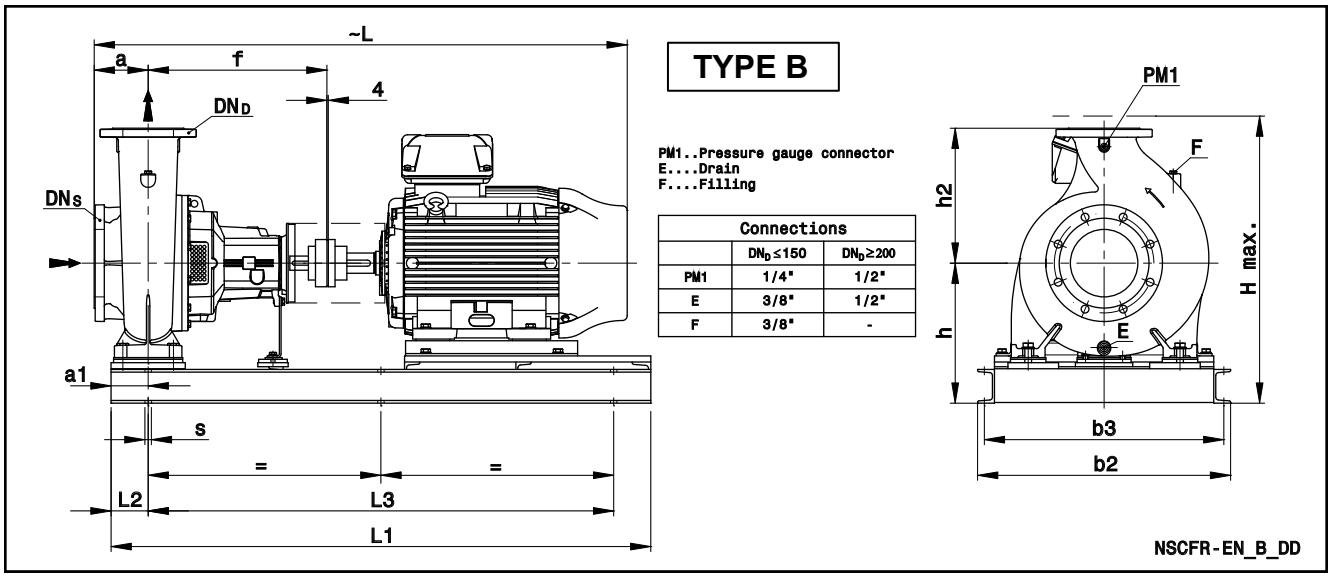

Connections		
	$DN_D \leq 150$	$DN_D \geq 200$
PM1	1/4"	1/2"
E	3/8"	1/2"
F	3/8"	-

LOWARA
a xylem brand

NSCF 80, 100, 125 SERIES (MOUNTED ON BASE)
DIMENSIONS AND WEIGHTS AT 50 Hz, 2 POLES

PUMP TYPE NSCF..2	TYPE	DIMENSIONS (mm)															WEIGHT (kg)	COUPLING TYPE
		DNS	DND	a	a1	b2	b3	f	h	h2	L	L1	L2	L3	H max	s FOR SCREWS	G	
80-160/110/P	A	100	80	125	75	540	490	360	280	225	1092	1250	205	840	520	4xØ24 (M20)	194	B95B
80-160/150/P	A	100	80	125	75	540	490	360	280	225	1092	1250	205	840	520	4xØ24 (M20)	211	B95B
80-160/185/P	A	100	80	125	75	540	490	360	280	225	1092	1250	205	840	520	4xØ24 (M20)	224	B95B
80-160/220/W	A	100	80	125	75	540	490	360	280	225	1152	1250	205	840	559	4xØ24 (M20)	291	B110A
80-200/220/W	A	100	80	125	75	540	490	470	280	250	1262	1250	205	840	559	4xØ24 (M20)	308	B110B
80-200/300/W	A	100	80	125	75	610	550	470	310	250	1365	1400	230	940	627	4xØ28 (M24)	390	B125B
80-200/370/W	A	100	80	125	75	610	550	470	310	250	1365	1400	230	940	627	4xØ28 (M24)	411	B125B
80-200/450/W	A	100	80	125	75	610	550	470	365	250	1454	1400	230	940	749	4xØ28 (M24)	562	B125B
80-250/370/W	A	100	80	125	90	610	550	470	310	280	1365	1400	230	940	627	4xØ28 (M24)	414	B125B
80-250/450/W	A	100	80	125	90	610	550	470	365	280	1454	1400	230	940	749	4xØ28 (M24)	565	B125B
80-250/550/W	A	100	80	125	90	660	600	470	390	280	1563	1600	270	1060	792	4xØ28 (M24)	674	B140A
80-250/750/W	A	100	80	125	90	730	670	470	420	280	1669	1800	300	1200	892	4xØ28 (M24)	942	B160A
80-316/900/W	B	100	80	125	110	750	710	530	440	315	1730	1600	110	1380	912	6xØ19 (M16)	1061	B160B
80-316/1100/W	B	100	80	125	110	860	810	530	505	315	1903	1850	110	1630	1035	6xØ26 (M20)	1340	B160B
80-316/1320/W	B	100	80	125	110	860	810	530	505	315	1903	1850	110	1630	1035	6xØ26 (M20)	1426	B160B
80-316/1600/W	B	100	80	125	110	860	810	530	505	315	1903	1850	110	1630	1035	6xØ26 (M20)	1507	B160B
100-160/150/P	B	125	100	125	110	670	630	470	365	280	1203	1330	110	1110	645	6xØ19 (M16)	304	B95E
100-160/185/P	B	125	100	125	110	670	630	470	365	280	1203	1330	110	1110	645	6xØ19 (M16)	312	B95E
100-160/220/W	B	125	100	125	110	670	630	470	385	280	1263	1330	110	1110	665	6xØ19 (M16)	385	B110B
100-160/300/W	B	125	100	125	110	560	520	470	330	280	1366	1350	110	1130	647	6xØ19 (M16)	422	B125B
100-200/300/W	B	125	100	125	110	560	520	470	330	280	1366	1350	110	1130	647	6xØ19 (M16)	430	B125B
100-200/370/W	B	125	100	125	110	560	520	470	330	280	1366	1350	110	1130	647	6xØ19 (M16)	451	B125B
100-200/450/W	B	125	100	125	110	560	520	470	355	280	1455	1350	110	1130	739	6xØ19 (M16)	610	B125B
100-200/550/W	B	125	100	125	110	750	710	470	405	280	1564	1550	110	1330	807	6xØ19 (M16)	735	B140A
100-250/450/W	B	125	100	140	110	560	520	470	355	280	1470	1350	110	1130	739	6xØ19 (M16)	612	B125B
100-250/550/W	B	125	100	140	110	750	710	470	405	280	1579	1550	110	1330	807	6xØ19 (M16)	738	B140A
100-250/750/W	B	125	100	140	110	750	710	470	390	280	1685	1550	110	1330	862	6xØ19 (M16)	956	B160A
100-250/900/W	B	125	100	140	110	750	710	470	390	280	1685	1550	110	1330	862	6xØ19 (M16)	991	B160A
100-316/1100/W	B	125	100	140	110	860	810	530	505	315	1918	1850	110	1630	1035	6xØ26 (M20)	1343	B160B
100-316/1320/W	B	125	100	140	110	860	810	530	505	315	1918	1850	110	1630	1035	6xØ26 (M20)	1429	B160B
100-316/1600/W	B	125	100	140	110	860	810	530	505	315	1918	1850	110	1630	1035	6xØ26 (M20)	1510	B160B
125-200/450/W	B	150	125	140	110	560	520	470	355	315	1470	1350	110	1130	739	6xØ19 (M16)	617	B125B
125-200/550/W	B	150	125	140	110	750	710	470	405	315	1579	1550	110	1330	807	6xØ19 (M16)	743	B140A
125-200/750/W	B	150	125	140	110	750	710	470	405	315	1685	1550	110	1330	877	6xØ19 (M16)	970	B160A
125-200/900/W	B	150	125	140	110	750	710	470	405	315	1685	1550	110	1330	877	6xØ19 (M16)	1005	B160A
125-315/1100/W	B	150	125	140	110	860	810	530	505	355	1918	1850	110	1630	1035	6xØ26 (M20)	1344	B160B
125-315/1320/W	B	150	125	140	110	860	810	530	505	355	1918	1850	110	1630	1035	6xØ26 (M20)	1430	B160B
125-315/1600/W	B	150	125	140	110	860	810	530	505	355	1918	1850	110	1630	1035	6xØ26 (M20)	1511	B160B
125-315/2000/W	B	150	125	140	110	860	810	530	505	355	2027	1850	110	1630	1080	6xØ26 (M20)	1692	B180A

NOTE: Pumps with flanges according to EN 1092-2 as standard.

Nscf80-125-2p50-en_c_td

Available ASME B16.5 version on request. For flanges dimensions see drawing.

LOWARA
a xylem brand

NSCF 32 SERIES (MOUNTED ON BASE)
DIMENSIONS AND WEIGHTS AT 50 Hz, 4 POLES

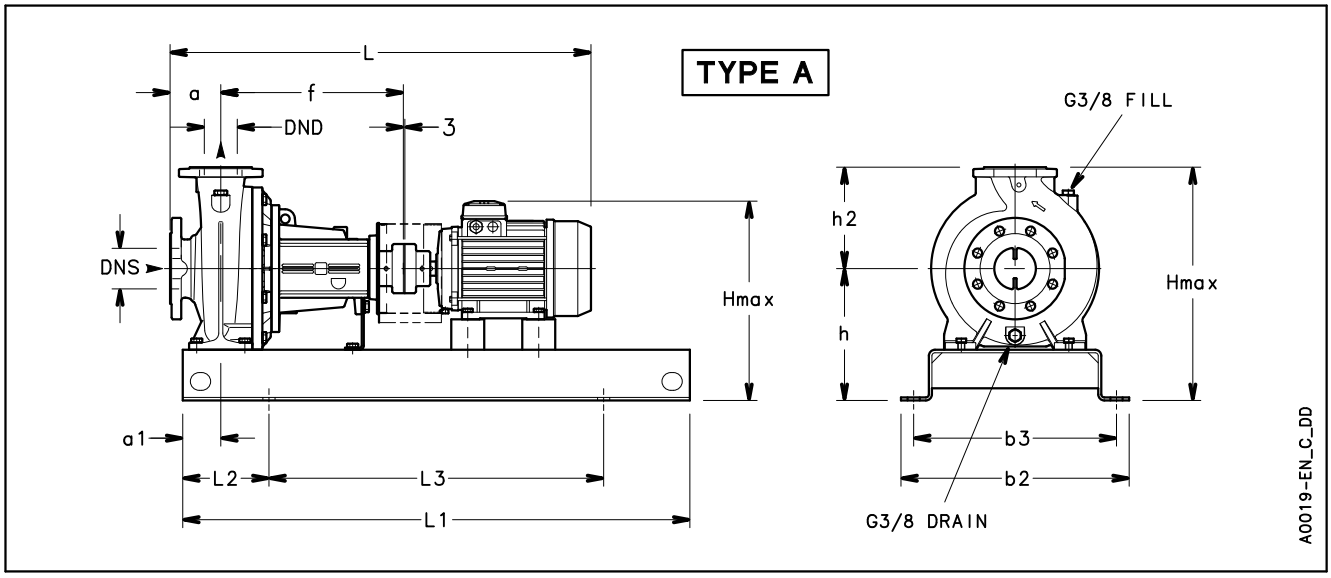

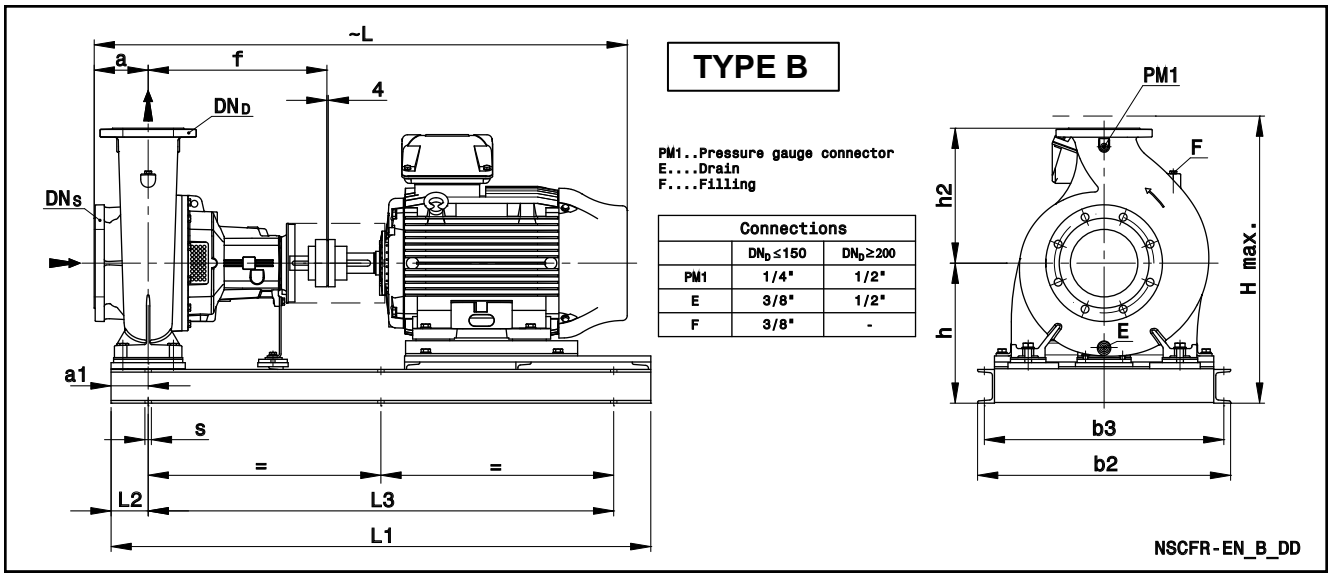

PUMP TYPE NSCF..4	TYPE	DIMENSIONS (mm)															WEIGHT	COUPLING TYPE
		DNS	DND	a	a1	b2	b3	f	h	h2	L	L1	L2	L3	H max	s FOR SCREWS	kg	
32-125/02B/S	A	50	32	80	60	360	320	360	212	140	704	800	130	540	352	4xØ19 (M16)	61	B68A
32-125/02A/S	A	50	32	80	60	360	320	360	212	140	704	800	130	540	352	4xØ19 (M16)	61	B68A
32-125/02/S	A	50	32	80	60	360	320	360	212	140	704	800	130	540	352	4xØ19 (M16)	61	B68A
32-125/03/S	A	50	32	80	60	360	320	360	212	140	704	800	130	540	352	4xØ19 (M16)	62	B68A
32-160/02/S	A	50	32	80	60	360	320	360	232	160	704	800	130	540	392	4xØ19 (M16)	62	B68A
32-160/03/S	A	50	32	80	60	360	320	360	232	160	704	800	130	540	392	4xØ19 (M16)	63	B68A
32-160/05A/S	A	50	32	80	60	360	320	360	232	160	746	800	130	540	392	4xØ19 (M16)	66	B68B
32-160/05/S	A	50	32	80	60	360	320	360	232	160	746	800	130	540	392	4xØ19 (M16)	66	B68B
32-200/05A/S	A	50	32	80	60	360	320	360	260	180	746	800	130	540	440	4xØ19 (M16)	73	B68B
32-200/05/S	A	50	32	80	60	360	320	360	260	180	746	800	130	540	440	4xØ19 (M16)	73	B68B
32-200/07/X	A	50	32	80	60	360	320	360	260	180	714	800	130	540	440	4xØ19 (M16)	76	B68B
32-200/11/P	A	50	32	80	60	390	350	360	260	180	791	900	150	600	440	4xØ19 (M16)	85	B68C
32-250/11A/P	A	50	32	100	75	450	400	360	280	225	811	1000	170	660	505	4xØ24 (M20)	112	B68C
32-250/11/P	A	50	32	100	75	450	400	360	280	225	811	1000	170	660	505	4xØ24 (M20)	112	B68C
32-250/15/P	A	50	32	100	75	450	400	360	280	225	811	1000	170	660	505	4xØ24 (M20)	117	B68C
32-250/22/P	A	50	32	100	75	450	400	360	280	225	888	1000	170	660	505	4xØ24 (M20)	127	B80A

NOTE: Pumps with flanges according to EN 1092-2 as standard.

Nscf32_4p50-en_c_td

Available ASME B16.5 version on request. For flanges dimensions see drawing.

LOWARA
a xylem brand

NSCF 40, 50, 65 SERIES (MOUNTED ON BASE)
DIMENSIONS AND WEIGHTS AT 50 Hz, 4 POLES

PUMP TYPE NSCF..4	TYPE	DIMENSIONS (mm)															WEIGHT	COUPLING TYPE
		DNS	DND	a	a1	b2	b3	f	h	h2	L	L1	L2	L3	H max	s FOR SCREWS	kg	
40-125/02A/S	A	65	40	80	60	360	320	360	212	140	704	800	130	540	352	4xØ19 (M16)	62	B68A
40-125/02/S	A	65	40	80	60	360	320	360	212	140	704	800	130	540	352	4xØ19 (M16)	62	B68A
40-125/03/S	A	65	40	80	60	360	320	360	212	140	704	800	130	540	352	4xØ19 (M16)	63	B68A
40-125/05/S	A	65	40	80	60	360	320	360	212	140	746	800	130	540	352	4xØ19 (M16)	66	B68B
40-160/03/S	A	65	40	80	60	360	320	360	232	160	704	800	130	540	392	4xØ19 (M16)	64	B68A
40-160/05/S	A	65	40	80	60	360	320	360	232	160	746	800	130	540	392	4xØ19 (M16)	67	B68B
40-160/07/X	A	65	40	80	60	360	320	360	232	160	714	800	130	540	392	4xØ19 (M16)	70	B68B
40-160/11/P	A	65	40	80	60	390	350	360	232	160	791	900	150	600	392	4xØ19 (M16)	79	B68C
40-200/07/X	A	65	40	100	60	390	350	360	260	180	734	900	150	600	440	4xØ19 (M16)	81	B68B
40-200/11/P	A	65	40	100	60	390	350	360	260	180	811	900	150	600	440	4xØ19 (M16)	87	B68C
40-200/15A/P	A	65	40	100	60	390	350	360	260	180	811	900	150	600	440	4xØ19 (M16)	92	B68C
40-200/15/P	A	65	40	100	60	390	350	360	260	180	811	900	150	600	440	4xØ19 (M16)	92	B68C
40-250/11/P	A	65	40	100	75	450	400	360	280	225	811	1000	170	660	505	4xØ24 (M20)	113	B68C
40-250/15/P	A	65	40	100	75	450	400	360	280	225	811	1000	170	660	505	4xØ24 (M20)	118	B68C
40-250/22A/P	A	65	40	100	75	450	400	360	280	225	888	1000	170	660	505	4xØ24 (M20)	128	B80A
40-250/22/P	A	65	40	100	75	450	400	360	280	225	888	1000	170	660	505	4xØ24 (M20)	128	B80A
40-250/30/P	A	65	40	100	75	450	400	360	280	225	906	1000	170	660	505	4xØ24 (M20)	133	B80A
50-125/03/S	A	65	50	100	60	360	320	360	232	160	724	800	130	540	392	4xØ19 (M16)	66	B68A
50-125/05/S	A	65	50	100	60	360	320	360	232	160	766	800	130	540	392	4xØ19 (M16)	69	B68B
50-125/07/X	A	65	50	100	60	360	320	360	232	160	734	800	130	540	392	4xØ19 (M16)	72	B68B
50-125/11/P	A	65	50	100	60	390	350	360	232	160	811	900	150	600	392	4xØ19 (M16)	81	B68C
50-160/07/X	A	65	50	100	60	390	350	360	260	180	734	900	150	600	440	4xØ19 (M16)	82	B68B
50-160/11A/P	A	65	50	100	60	390	350	360	260	180	811	900	150	600	440	4xØ19 (M16)	88	B68C
50-160/11/P	A	65	50	100	60	390	350	360	260	180	811	900	150	600	440	4xØ19 (M16)	88	B68C
50-160/15/P	A	65	50	100	60	390	350	360	260	180	811	900	150	600	440	4xØ19 (M16)	93	B68C
50-200/11/P	A	65	50	100	60	390	350	360	260	200	811	900	150	600	460	4xØ19 (M16)	89	B68C
50-200/15/P	A	65	50	100	60	390	350	360	260	200	811	900	150	600	460	4xØ19 (M16)	94	B68C
50-200/22A/P	A	65	50	100	60	390	350	360	260	200	888	900	150	600	460	4xØ19 (M16)	104	B80A
50-200/22/P	A	65	50	100	60	390	350	360	260	200	888	900	150	600	460	4xØ19 (M16)	104	B80A
50-250/22A/P	A	65	50	100	75	450	400	360	280	225	888	1000	170	660	505	4xØ24 (M20)	129	B80A
50-250/22/P	A	65	50	100	75	450	400	360	280	225	888	1000	170	660	505	4xØ24 (M20)	129	B80A
50-250/30/P	A	65	50	100	75	450	400	360	280	225	906	1000	170	660	505	4xØ24 (M20)	134	B80A
50-250/40/P	A	65	50	100	75	450	400	360	280	225	906	1000	170	660	505	4xØ24 (M20)	153	B80A
50-315/40/P	B	65	50	125	110	670	630	470	365	280	1041	1100	110	880	645	6xØ19 (M16)	246,6	B95C
50-315/55/P	B	65	50	125	110	670	630	470	385	280	1084	1100	110	880	665	6xØ19 (M16)	258	B95D
50-315/75/P	B	65	50	125	110	670	630	470	385	280	1084	1100	110	880	665	6xØ19 (M16)	258	B95D
50-315/110/P	B	65	50	125	110	670	630	470	365	280	1198	1330	110	1110	645	6xØ19 (M16)	290,3	B95E
65-125/05/S	A	80	65	100	75	390	350	360	260	180	766	900	150	600	440	4xØ19 (M16)	83	B68B
65-125/07/X	A	80	65	100	75	390	350	360	260	180	734	900	150	600	440	4xØ19 (M16)	86	B68B
65-125/11/P	A	80	65	100	75	390	350	360	260	180	811	900	150	600	440	4xØ19 (M16)	92	B68C
65-125/15/P	A	80	65	100	75	390	350	360	260	180	811	900	150	600	440	4xØ19 (M16)	97	B68C
65-160/11A/P	A	80	65	100	75	450	400	360	260	200	811	1000	170	660	460	4xØ24 (M20)	113	B68C
65-160/11/P	A	80	65	100	75	450	400	360	260	200	811	1000	170	660	460	4xØ24 (M20)	113	B68C
65-160/15/P	A	80	65	100	75	450	400	360	260	200	811	1000	170	660	460	4xØ24 (M20)	118	B68C
65-160/22A/P	A	80	65	100	75	450	400	360	260	200	888	1000	170	660	460	4xØ24 (M20)	128	B80A
65-160/22/P	A	80	65	100	75	450	400	360	260	200	888	1000	170	660	460	4xØ24 (M20)	128	B80A
65-200/15/P	A	80	65	100	75	450	400	360	280	225	811	1000	170	660	505	4xØ24 (M20)	121	B68C
65-200/22A/P	A	80	65	100	75	490	440	360	280	225	888	1120	190	740	505	4xØ24 (M20)	137	B80A
65-200/22/P	A	80	65	100	75	490	440	360	280	225	888	1120	190	740	505	4xØ24 (M20)	137	B80A
65-200/30/P	A	80	65	100	75	490	440	360	280	225	906	1120	190	740	505	4xØ24 (M20)	142	B80A
65-200/40/P	A	80	65	100	75	490	440	360	280	225	906	1120	190	740	505	4xØ24 (M20)	161	B80A
65-250/30/P	A	80	65	100	90	490	440	470	310	250	1016	1120	190	740	560	4xØ24 (M20)	161	B95C
65-250/40/P	A	80	65	100	90	490	440	470	310	250	1016	1120	190	740	560	4xØ24 (M20)	180	B95C
65-250/55A/P	A	80	65	100	90	490	440	470	310	250	1058	1120	190	740	560	4xØ24 (M20)	189	B95D
65-250/55/P	A	80	65	100	90	490	440	470	310	250	1058	1120	190	740	560	4xØ24 (M20)	189	B95D
65-250/75/P	A	80	65	100	90	490	440	470	310	250	1058	1120	190	740	560	4xØ24 (M20)	193	B95D
65-315/55/P	B	80	65	125	110	670	630	470	385	280	1084	1100	110	880	665	6xØ19 (M16)	265,3	B95D
65-315/75/P	B	80	65	125	110	670	630	470	385	280	1084	1100	110	880	665	6xØ19 (M16)	265,3	B95D
65-315/110/P	B	80	65	125	110	670	630	470	365	280	1203	1330	110	1110	645	6xØ19 (M16)	297,5	B95E
65-315/150/P	B	80	65	125	110	670	630	470	365	280	1203	1330	110	1110	645	6xØ19 (M16)	342,4	B110E

NOTE: Pumps with flanges according to EN 1092-2 as standard.

Nscf40-65_4p50-en_d_td

Available ASME B16.5 version on request. For flanges dimensions see drawing.

NSCF 80, 100, 125 SERIES (MOUNTED ON BASE)
DIMENSIONS AND WEIGHTS AT 50 Hz, 4 POLES

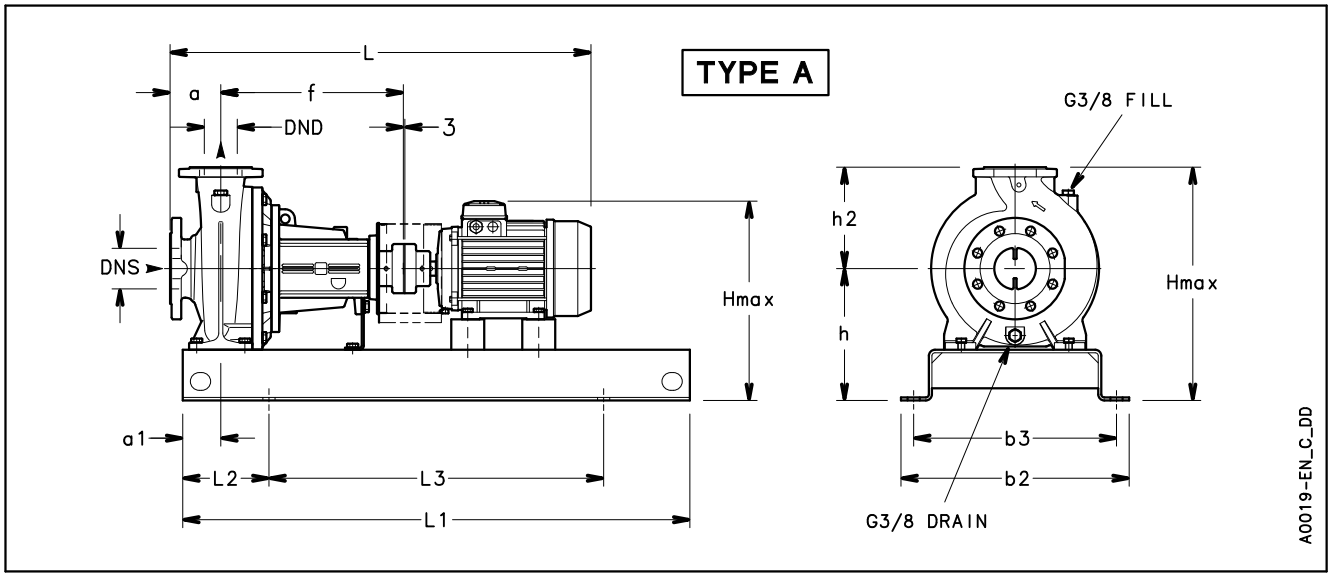

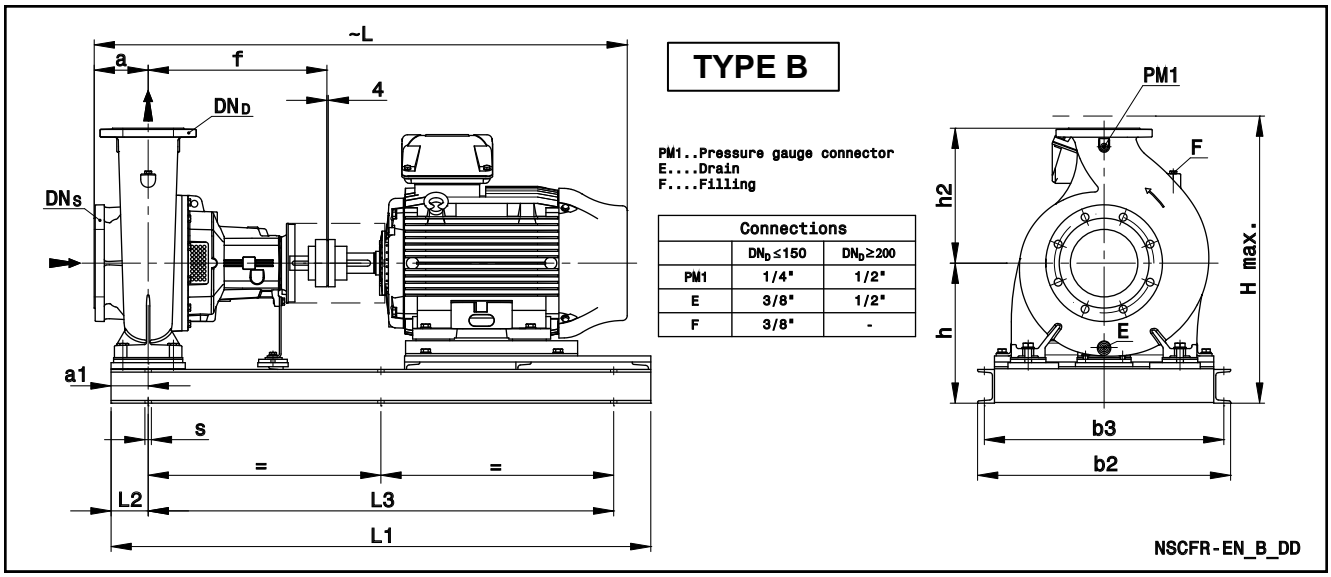

Connections		
	$DN_D \leq 150$	$DN_D \geq 200$
PM1	1/4"	1/2"
E	3/8"	1/2"
F	3/8"	-

LOWARA
a xylem brand

NSCF 80, 100, 125 SERIES (MOUNTED ON BASE)
DIMENSIONS AND WEIGHTS AT 50 Hz, 4 POLES

PUMP TYPE NSCF..4	TYPE	DIMENSIONS (mm)															WEIGHT (kg)	COUPLING TYPE
		DNS	DND	a	a1	b2	b3	f	h	h2	L	L1	L3	L2	H max	s FOR SCREWS	G	
80-160/15/P	A	100	80	125	75	450	400	360	280	225	836	1000	660	170	505	4xØ24 (M20)	124	B68C
80-160/22A/P	A	100	80	125	75	490	440	360	280	225	913	1120	740	190	505	4xØ24 (M20)	140	B80A
80-160/22/P	A	100	80	125	75	490	440	360	280	225	913	1120	740	190	505	4xØ24 (M20)	140	B80A
80-160/30/P	A	100	80	125	75	490	440	360	280	225	931	1120	740	190	505	4xØ24 (M20)	145	B80A
80-200/30/P	A	100	80	125	75	490	440	470	280	250	1041	1120	740	190	530	4xØ24 (M20)	162	B95C
80-200/40/P	A	100	80	125	75	490	440	470	280	250	1041	1120	740	190	530	4xØ24 (M20)	182	B95C
80-200/55A/P	A	100	80	125	75	490	440	470	280	250	1083	1120	740	190	530	4xØ24 (M20)	191	B95D
80-200/55/P	A	100	80	125	75	490	440	470	280	250	1083	1120	740	190	530	4xØ24 (M20)	191	B95D
80-250/55A/P	A	100	80	125	90	540	490	470	310	280	1083	1250	840	205	590	4xØ24 (M20)	200	B95D
80-250/55/P	A	100	80	125	90	540	490	470	310	280	1083	1250	840	205	590	4xØ24 (M20)	200	B95D
80-250/75/P	A	100	80	125	90	540	490	470	310	280	1083	1250	840	205	590	4xØ24 (M20)	204	B95D
80-250/110/P	A	100	80	125	90	540	490	470	310	280	1202	1250	840	205	590	4xØ24 (M20)	259	B95E
80-315/110A/P	B	100	80	125	110	670	630	470	365	315	1203	1330	1110	110	680	6xØ19 (M16)	306	B95E
80-315/110/P	B	100	80	125	110	670	630	470	365	315	1203	1330	1110	110	680	6xØ19 (M16)	306	B95E
80-315/150/P	B	100	80	125	110	670	630	470	365	315	1203	1330	1110	110	680	6xØ19 (M16)	351	B110E
80-315/185/W	B	100	80	125	110	670	630	470	385	315	1263	1330	1110	110	700	6xØ19 (M16)	410	B110B
80-315/220/W	B	100	80	125	110	670	630	470	385	315	1301	1330	1110	110	700	6xØ19 (M16)	428	B110B
80-400/185/W	B	100	80	125	110	670	630	530	400	355	1323	1430	1210	110	755	6xØ19 (M16)	443	B110D
80-400/220/W	B	100	80	125	110	670	630	530	400	355	1361	1430	1210	110	755	6xØ19 (M16)	461	B110D
80-400/300/W	B	100	80	125	110	670	630	530	420	355	1426	1430	1210	110	775	6xØ19 (M16)	514	B125C
80-400/370/W	B	100	80	125	110	750	710	530	415	355	1545	1600	1380	110	799	6xØ19 (M16)	703	B140B
100-160/22A/P	B	125	100	125	110	670	630	470	355	280	1024	1100	880	110	635	6xØ19 (M16)	217	B95C
100-160/22/P	B	125	100	125	110	670	630	470	355	280	1024	1100	880	110	635	6xØ19 (M16)	217	B95C
100-160/30/P	B	125	100	125	110	670	630	470	355	280	1041	1100	880	110	635	6xØ19 (M16)	220	B95C
100-160/40/P	B	125	100	125	110	670	630	470	365	280	1041	1100	880	110	645	6xØ19 (M16)	241	B95C
100-200/40/P	B	125	100	125	110	670	630	470	365	280	1041	1100	880	110	645	6xØ19 (M16)	249	B95C
100-200/55/P	B	125	100	125	110	670	630	470	385	280	1084	1100	880	110	665	6xØ19 (M16)	261	B95D
100-200/75/P	B	125	100	125	110	670	630	470	385	280	1084	1100	880	110	665	6xØ19 (M16)	261	B95D
100-250/55/P	B	125	100	140	110	670	630	470	385	280	1099	1100	880	110	665	6xØ19 (M16)	263	B95D
100-250/75/P	B	125	100	140	110	670	630	470	385	280	1099	1100	880	110	665	6xØ19 (M16)	263	B95D
100-250/110/P	B	125	100	140	110	670	630	470	365	280	1218	1330	1110	110	645	6xØ19 (M16)	296	B95E
100-315/110/P	B	125	100	140	110	670	630	470	365	315	1218	1330	1110	110	680	6xØ19 (M16)	304	B95E
100-315/150/P	B	125	100	140	110	670	630	470	365	315	1218	1330	1110	110	680	6xØ19 (M16)	349	B110E
100-315/185/W	B	125	100	140	110	670	630	470	385	315	1278	1330	1110	110	700	6xØ19 (M16)	408	B110B
100-315/220/W	B	125	100	140	110	670	630	470	385	315	1316	1330	1110	110	700	6xØ19 (M16)	426	B110B
100-315/300/W	B	125	100	140	110	560	520	470	355	315	1381	1350	1130	110	672	6xØ19 (M16)	454	B125B
100-400/300/W	B	125	100	140	110	670	630	530	420	355	1441	1430	1210	110	775	6xØ19 (M16)	543	B125C
100-400/370/W	B	125	100	140	110	750	710	530	415	355	1560	1600	1380	110	799	6xØ19 (M16)	729	B140B
100-400/450/W	B	125	100	140	110	750	710	530	415	355	1560	1600	1380	110	799	6xØ19 (M16)	757	B140B
125-200/55/P	B	150	125	140	110	670	630	470	385	315	1099	1100	880	110	700	6xØ19 (M16)	268	B95D
125-200/75/P	B	150	125	140	110	670	630	470	385	315	1099	1100	880	110	700	6xØ19 (M16)	268	B95D
125-200/110/P	B	150	125	140	110	670	630	470	365	315	1218	1330	1110	110	680	6xØ19 (M16)	300	B95E
125-250/75/P	B	150	125	140	110	670	630	470	385	355	1099	1100	880	110	740	6xØ19 (M16)	268	B95D
125-250/110/P	B	150	125	140	110	670	630	470	365	355	1218	1330	1110	110	720	6xØ19 (M16)	300	B95E
125-250/150/P	B	150	125	140	110	670	630	470	365	355	1218	1330	1110	110	720	6xØ19 (M16)	345	B110E
125-315/185/W	B	150	125	140	110	670	630	530	400	355	1338	1430	1210	110	755	6xØ19 (M16)	444	B110D
125-315/220/W	B	150	125	140	110	670	630	530	400	355	1376	1430	1210	110	755	6xØ19 (M16)	462	B110D
125-315/300/W	B	150	125	140	110	670	630	530	420	355	1441	1430	1210	110	775	6xØ19 (M16)	517	B125C
125-315/370/W	B	150	125	140	110	750	710	530	415	355	1560	1600	1380	110	799	6xØ19 (M16)	703	B140B
125-400/370/W	B	150	125	140	110	750	710	530	440	400	1560	1600	1380	110	840	6xØ19 (M16)	753	B140B
125-400/450/W	B	150	125	140	110	750	710	530	440	400	1560	1600	1380	110	840	6xØ19 (M16)	781	B140B
125-400/550/W	B	150	125	140	110	750	710	530	440	400	1639	1600	1380	110	842	6xØ19 (M16)	865	B160B
125-400/750/W	B	150	125	140	110	750	710	530	440	400	1745	1600	1380	110	912	6xØ19 (M16)	1075	B180B

NOTE: Pumps with flanges according to EN 1092-2 as standard.

Nscf80-125_4p50-en_d_td

Available ASME B16.5 version on request. For flanges dimensions see drawing.

LOWARA
a xylem brand

NSCF 150 SERIES (MOUNTED ON BASE)
DIMENSIONS AND WEIGHTS AT 50 Hz, 4 POLES

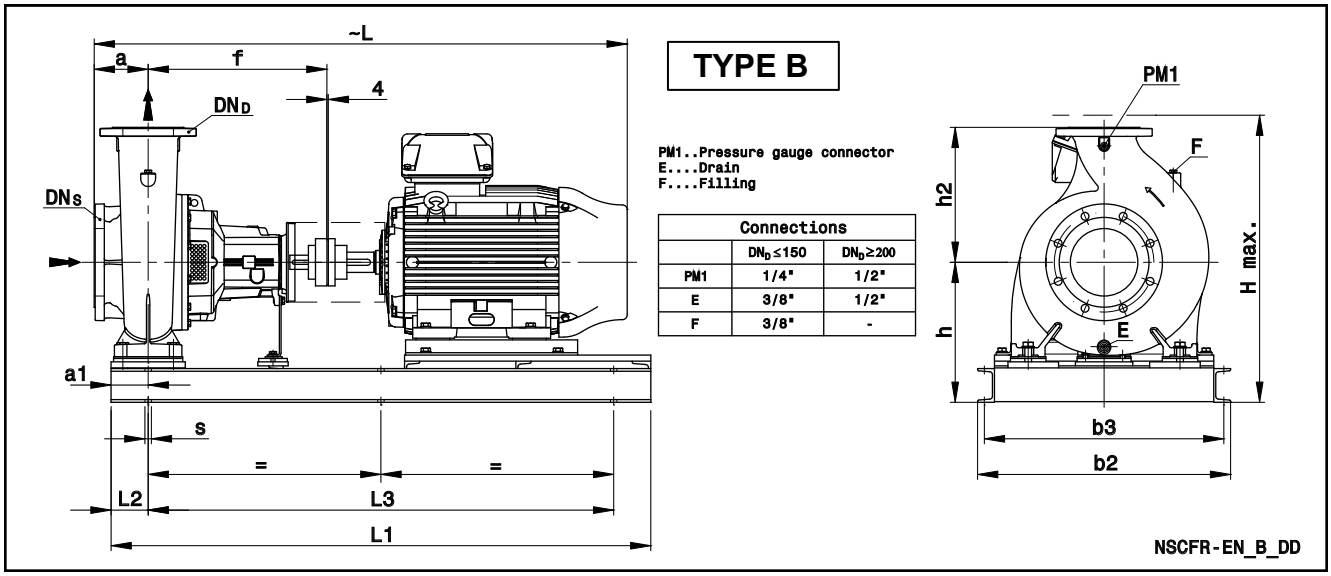

PUMP TYPE NSCF..4	TYPE	DIMENSIONS (mm)													H	s	WEIGHT (kg)	COUPLING TYPE
		DNS	DND	a	a1	b2	b3	f	h	h2	L	L1	L2	L3	max	FOR SCREWS	G	
150-200/110A/P	B	200	150	160	110	670	630	470	385	400	1238	1330	110	1110	785	6xØ19 (M16)	357	B95E
150-200/110/P	B	200	150	160	110	670	630	470	385	400	1238	1330	110	1110	785	6xØ19 (M16)	357	B95E
150-200/150A/P	B	200	150	160	110	670	630	470	385	400	1238	1330	110	1110	785	6xØ19 (M16)	402	B110E
150-200/150/P	B	200	150	160	110	670	630	470	385	400	1238	1330	110	1110	785	6xØ19 (M16)	402	B110E
150-250/150/P	B	200	150	160	110	670	630	530	385	400	1298	1430	110	1210	785	6xØ19 (M16)	413	B110C
150-250/185/W	B	200	150	160	110	670	630	530	400	400	1358	1430	110	1210	800	6xØ19 (M16)	472	B110D
150-250/220/W	B	200	150	160	110	670	630	530	400	400	1396	1430	110	1210	800	6xØ19 (M16)	490	B110D
150-250/300/W	B	200	150	160	110	670	630	530	420	400	1461	1430	110	1210	820	6xØ19 (M16)	545	B125C
150-315/300/W	B	200	150	160	110	670	630	530	420	400	1461	1430	110	1210	820	6xØ19 (M16)	551	B125C
150-315/370/W	B	200	150	160	110	750	710	530	415	400	1580	1600	110	1380	815	6xØ19 (M16)	737	B140B
150-315/450/W	B	200	150	160	110	750	710	530	415	400	1580	1600	110	1380	815	6xØ19 (M16)	765	B140B
150-400/450/W	B	200	150	160	110	750	710	530	440	450	1580	1600	110	1380	890	6xØ19 (M16)	809	B140B
150-400/550/W	B	200	150	160	110	750	710	530	440	450	1659	1600	110	1380	890	6xØ19 (M16)	893	B160B
150-400/750/W	B	200	150	160	110	750	710	530	440	450	1765	1600	110	1380	912	6xØ19 (M16)	1103	B180B
150-400/900/W	B	200	150	160	110	750	710	530	440	450	1765	1600	110	1380	912	6xØ19 (M16)	1151	B180B
150-400/1100/W	B	200	150	160	110	750	710	530	440	450	1765	1600	110	1380	912	6xØ19 (M16)	1258	B180B
150-500/900/W	B	200	150	180	165	860	810	770	565	500	2025	1750	165	1420	1065	6xØ26 (M20)	1384	B180C
150-500/1100/W	B	200	150	180	165	860	810	770	585	500	2228	2000	165	1670	1115	6xØ26 (M20)	1678	B200A
150-500/1320/W	B	200	150	180	165	860	810	770	585	500	2228	2000	165	1670	1115	6xØ26 (M20)	1763	B200A
150-500/1600/W	B	200	150	180	165	860	810	770	585	500	2228	2000	165	1670	1115	6xØ26 (M20)	1820	B200A
150-500/2000/W	B	200	150	180	165	860	810	770	585	500	2337	2000	165	1670	1160	6xØ26 (M20)	2005	B225A

NOTE: Pumps with flanges according to EN 1092-2 as standard.

Nscf150_4p50-en_d_td

Available ASME B16.5 version on request. For flanges dimensions see drawing.

LOWARA
a xylem brand

NSCF 200, 250, 300 SERIES (MOUNTED ON BASE)
DIMENSIONS AND WEIGHTS AT 50 Hz, 4 POLES

PUMP TYPE NSCF..4	TYPE	DIMENSIONS (mm)															WEIGHT (kg)	COUPLING TYPE
		DNS	DND	a	a1	b2	b3	f	h	h2	L	L1	L2	L3	H max	s FOR SCREWS	G	
200-250/185/W	B	250	200	180	110	670	630	530	460	475	1378	1450	110	1230	935	6xØ19 (M16)	527	B110D
200-250/220/W	B	250	200	180	110	670	630	530	460	475	1416	1450	110	1230	935	6xØ19 (M16)	545	B110D
200-250/300A/W	B	250	200	180	110	670	630	530	460	475	1481	1450	110	1230	935	6xØ19 (M16)	588	B125C
200-250/300/W	B	250	200	180	110	670	630	530	460	475	1481	1450	110	1230	935	6xØ19 (M16)	588	B125C
200-315/300/W	B	250	200	180	110	670	630	530	460	450	1481	1450	110	1230	910	6xØ19 (M16)	592	B125C
200-315/370/W	B	250	200	180	110	750	710	530	480	450	1600	1660	110	1440	930	6xØ19 (M16)	791	B140B
200-315/450/W	B	250	200	180	110	750	710	530	480	450	1600	1660	110	1440	930	6xØ19 (M16)	819	B140B
200-315/550/W	B	250	200	180	110	750	710	530	480	450	1679	1660	110	1440	930	6xØ19 (M16)	904	B160B
200-315/750/W	B	250	200	180	110	750	710	530	480	450	1785	1660	110	1440	952	6xØ19 (M16)	1113	B180B
200-400/750A/W	B	250	200	180	165	860	810	770	565	500	2025	1750	165	1420	1065	6xØ26 (M20)	1291	B180C
200-400/750/W	B	250	200	180	165	860	810	770	565	500	2025	1750	165	1420	1065	6xØ26 (M20)	1291	B180C
200-400/900/W	B	250	200	180	165	860	810	770	565	500	2025	1750	165	1420	1065	6xØ26 (M20)	1339	B180C
200-400/1100/W	B	250	200	180	165	860	810	770	585	500	2228	2000	165	1670	1115	6xØ26 (M20)	1633	B200A
200-400/1320/W	B	250	200	180	165	860	810	770	585	500	2228	2000	165	1670	1115	6xØ26 (M20)	1718	B200A
200-500/1320/W	B	250	200	200	165	860	810	770	635	560	2248	2000	165	1670	1195	6xØ26 (M20)	1778	B200A
200-500/1600/W	B	250	200	200	165	860	810	770	635	560	2248	2000	165	1670	1195	6xØ26 (M20)	1835	B200A
200-500/2000/W	B	250	200	200	165	860	810	770	635	560	2357	2000	165	1670	1210	6xØ26 (M20)	2019	B225A
200-500/2500/W	B	250	200	200	165	860	810	770	635	560	2357	2000	165	1670	1210	6xØ26 (M20)	2214	B225A
200-500/3150/W	B	250	200	200	165	1000	930	770	675	560	2456	2200	165	1870	1300	6xØ29 (M24)	2553	B250A
250-315/370/W	B	300	250	250	165	850	810	530	525	500	1670	1700	165	1370	1025	6xØ19 (M16)	905	B140B
250-315/450/W	B	300	250	250	165	850	810	530	525	500	1670	1700	165	1370	1025	6xØ19 (M16)	933	B140B
250-315/550/W	B	300	250	250	165	850	810	530	525	500	1749	1700	165	1370	1025	6xØ19 (M16)	1017	B160B
250-315/750/W	B	300	250	250	165	850	810	530	525	500	1855	1700	165	1370	1025	6xØ19 (M16)	1227	B180B
250-400/750/W	B	300	250	200	165	860	810	770	565	560	2045	1750	165	1420	1125	6xØ26 (M20)	1328	B180C
250-400/900/W	B	300	250	200	165	860	810	770	565	560	2045	1750	165	1420	1125	6xØ26 (M20)	1376	B180C
250-400/1100/W	B	300	250	200	165	860	810	770	585	560	2248	2000	165	1670	1145	6xØ26 (M20)	1670	B200A
250-400/1320/W	B	300	250	200	165	860	810	770	585	560	2248	2000	165	1670	1145	6xØ26 (M20)	1755	B200A
250-400/1600/W	B	300	250	200	165	860	810	770	585	560	2248	2000	165	1670	1145	6xØ26 (M20)	1812	B200A
250-400/2000/W	B	300	250	200	165	860	810	770	585	560	2357	2000	165	1670	1160	6xØ26 (M20)	1997	B225A
250-500/1600/W	B	300	250	200	165	860	810	770	635	670	2248	2000	165	1670	1305	6xØ26 (M20)	1886	B200A
250-500/2000/W	B	300	250	200	165	860	810	770	635	670	2357	2000	165	1670	1305	6xØ26 (M20)	2070	B225A
250-500/2500/W	B	300	250	200	165	860	810	770	635	670	2357	2000	165	1670	1305	6xØ26 (M20)	2265	B225A
250-500/3150/W	B	300	250	200	165	1000	930	770	675	670	2456	2200	165	1870	1345	6xØ29 (M24)	2604	B250A
250-500/3550/W	B	300	250	200	165	1000	930	770	675	670	2456	2200	165	1870	1345	6xØ29 (M24)	2710	B250A
300-350/750A/W	B	350	300	250	200	960	910	800	620	600	2125	1850	200	1450	1220	6xØ26 (M20)	1514	B180C
300-350/750/W	B	350	300	250	200	960	910	800	620	600	2125	1850	200	1450	1220	6xØ26 (M20)	1514	B180C
300-350/900/W	B	350	300	250	200	960	910	800	620	600	2125	1850	200	1450	1220	6xØ26 (M20)	1562	B180C
300-350/1100/W	B	350	300	250	200	960	910	800	640	600	2328	2100	200	1700	1240	6xØ26 (M20)	1871	B200A
300-400/1100/W	B	350	300	250	200	960	910	800	640	600	2328	2100	200	1700	1240	6xØ26 (M20)	1875	B200A
300-400/1320/W	B	350	300	250	200	960	910	800	640	600	2328	2100	200	1700	1240	6xØ26 (M20)	1960	B200A
300-400/1600/W	B	350	300	250	200	960	910	800	640	600	2328	2100	200	1700	1240	6xØ26 (M20)	2017	B200A
300-400/2000/W	B	350	300	250	200	960	910	800	640	600	2437	2100	200	1700	1240	6xØ26 (M20)	2201	B225A
300-400/2500/W	B	350	300	250	200	960	910	800	640	600	2437	2100	200	1700	1240	6xØ26 (M20)	2396	B225A
300-450/1600/W	B	350	300	250	200	960	910	800	665	630	2328	2100	200	1700	1295	6xØ26 (M20)	2058	B200A
300-450/2000/W	B	350	300	250	200	960	910	800	665	630	2437	2100	200	1700	1295	6xØ26 (M20)	2243	B225A
300-450/2500/W	B	350	300	250	200	960	910	800	665	630	2437	2100	200	1700	1295	6xØ26 (M20)	2438	B225A
300-450/3150/W	B	350	300	250	200	1000	930	800	705	630	2536	2250	200	1850	1335	6xØ29 (M24)	2754	B250A

NOTE: Pumps with flanges according to EN 1092-2 as standard.

Nscf200-300_4p50-en_d_td

Available ASME B16.5 version on request. For flanges dimensions see drawing.

LOWARA
a xylem brand

NSCC 32 SERIES (SPACER COUPLING)
DIMENSIONS AND WEIGHTS AT 50 Hz, 2 POLES

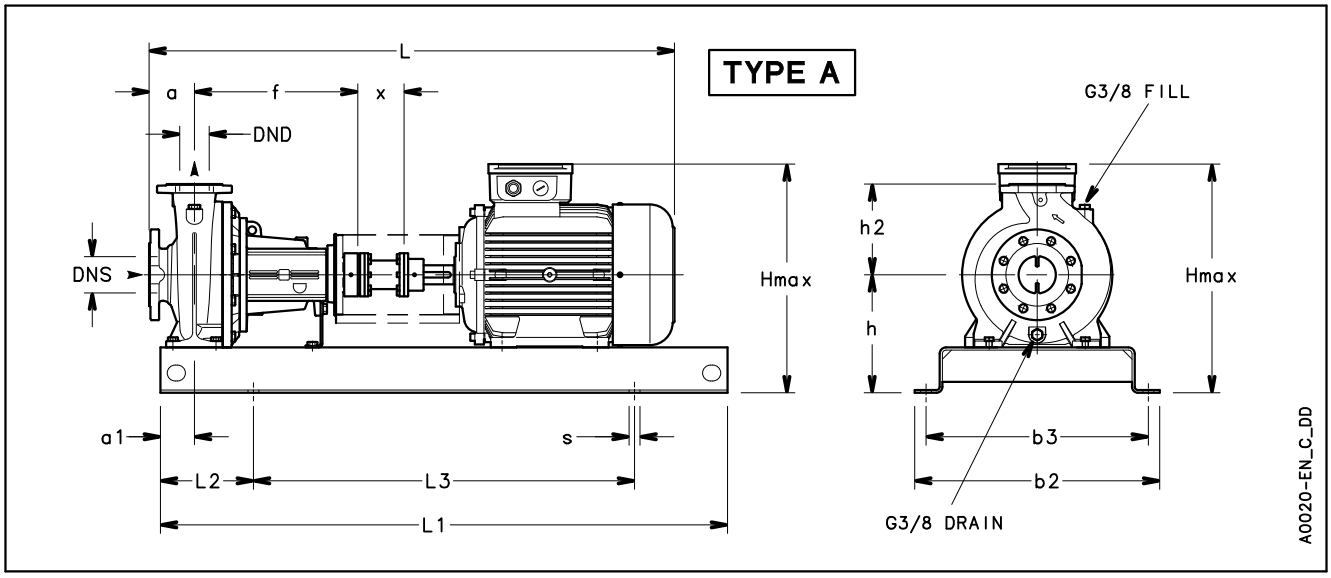

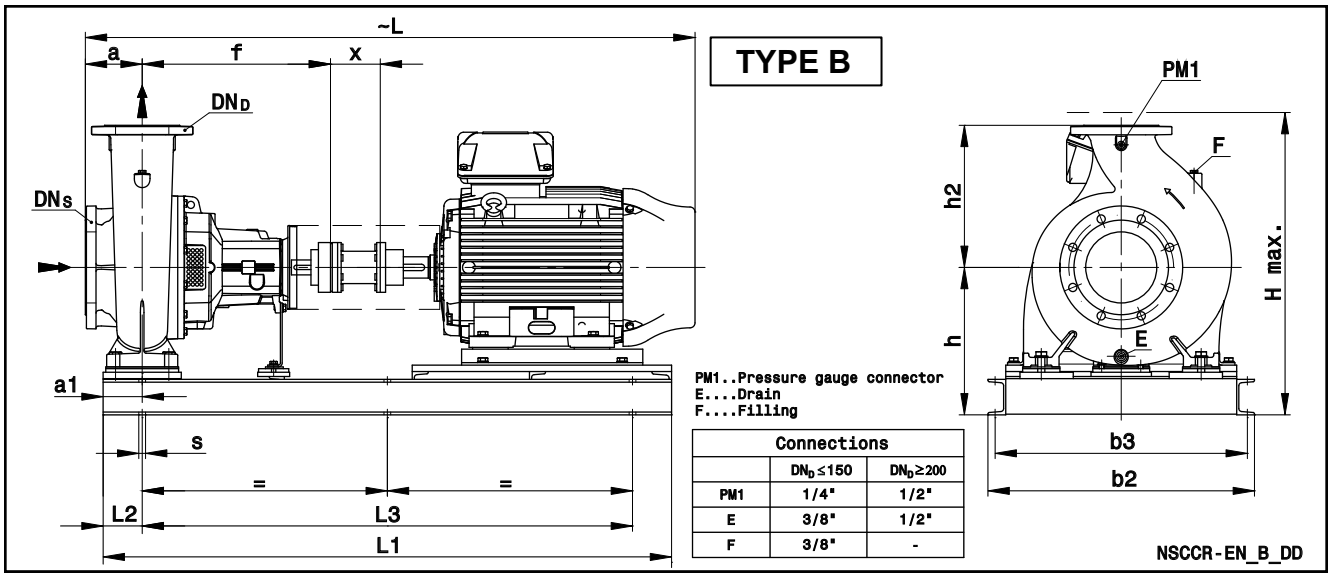

PUMP TYPE NSCC..2	TYPE	DIMENSIONS (mm)																WEIGHT	COUPLING TYPE
		DNS	DND	a	a1	b2	b3	f	h	h2	L	L1	L2	L3	x	H max	s FOR SCREWS	kg	
32-125/11/S	A	50	32	80	60	360	320	360	212	140	843	800	130	540	100	352	4xØ19 (M16)	68	H80A
32-125/15/P	A	50	32	80	60	390	350	360	212	140	888	900	150	600	100	352	4xØ19 (M16)	78	H80B
32-125/22/P	A	50	32	80	60	390	350	360	212	140	888	900	150	600	100	352	4xØ19 (M16)	80	H80B
32-125/30/P	A	50	32	80	60	390	350	360	212	140	919	900	150	600	100	366	4xØ19 (M16)	87	H80C
32-160/22/P	A	50	32	80	60	390	350	360	232	160	888	900	150	600	100	392	4xØ19 (M16)	81	H80B
32-160/30/P	A	50	32	80	60	390	350	360	232	160	919	900	150	600	100	392	4xØ19 (M16)	88	H80C
32-160/40/P	A	50	32	80	60	390	350	360	232	160	922	900	150	600	100	400	4xØ19 (M16)	93	H80C
32-160/55/P	A	50	32	80	60	450	400	360	232	160	987	1000	170	660	100	423	4xØ24 (M20)	122	H95A
32-200/30/P	A	50	32	80	60	390	350	360	260	180	919	900	150	600	100	440	4xØ19 (M16)	95	H80C
32-200/40/P	A	50	32	80	60	390	350	360	260	180	922	900	150	600	100	440	4xØ19 (M16)	100	H80C
32-200/55/P	A	50	32	80	60	450	400	360	260	180	987	1000	170	660	100	451	4xØ24 (M20)	129	H95A
32-200/75/P	A	50	32	80	60	450	400	360	260	180	987	1000	170	660	100	451	4xØ24 (M20)	133	H95A
32-250/75/P	A	50	32	100	75	490	440	360	280	225	1007	1120	190	740	100	505	4xØ24 (M20)	160	H95A
32-250/110A/P	A	50	32	100	75	540	490	360	280	225	1164	1250	205	840	100	520	4xØ24 (M20)	190	H95B
32-250/110/P	A	50	32	100	75	540	490	360	280	225	1164	1250	205	840	100	520	4xØ24 (M20)	190	H95B
32-250/150/P	A	50	32	100	75	540	490	360	280	225	1164	1250	205	840	100	520	4xØ24 (M20)	207	H95B

NOTA: Pompe con flange in accordo alle norme EN 1092-2.

Nscc32_2p50-en_c_td

Disponibile la versione ASME B16.5 su richiesta. Per dimensioni flange vedere disegno.

LOWARA
a xylem brand

NSCC 40, 50, 65 SERIES (SPACER COUPLING)
DIMENSIONS AND WEIGHTS AT 50 Hz, 2 POLES

PUMP TYPE NSCC..2	TYPE	DIMENSIONS (mm)																WEIGHT	COUPLING TYPE
		DNS	DND	a	a1	b2	b3	f	h	h2	L	L1	L2	L3	x	H max	s FOR SCREWS	kg	
40-125/15/P	A	65	40	80	60	390	350	360	212	140	888	900	150	600	100	352	4xØ19 (M16)	79	H80B
40-125/22/P	A	65	40	80	60	390	350	360	212	140	888	900	150	600	100	352	4xØ19 (M16)	81	H80B
40-125/30/P	A	65	40	80	60	390	350	360	212	140	919	900	150	600	100	366	4xØ19 (M16)	88	H80C
40-125/40/P	A	65	40	80	60	390	350	360	212	140	922	900	150	600	100	380	4xØ19 (M16)	93	H80C
40-160/30/P	A	65	40	80	60	390	350	360	232	160	919	900	150	600	100	392	4xØ19 (M16)	89	H80C
40-160/40/P	A	65	40	80	60	390	350	360	232	160	922	900	150	600	100	400	4xØ19 (M16)	94	H80C
40-160/55/P	A	65	40	80	60	450	400	360	232	160	987	1000	170	660	100	423	4xØ24 (M20)	123	H95A
40-160/75/P	A	65	40	80	60	450	400	360	232	160	987	1000	170	660	100	423	4xØ24 (M20)	127	H95A
40-200/55/P	A	65	40	100	60	450	400	360	260	180	1007	1000	170	660	100	451	4xØ24 (M20)	131	H95A
40-200/75/P	A	65	40	100	60	450	400	360	260	180	1007	1000	170	660	100	451	4xØ24 (M20)	135	H95A
40-200/110A/P	A	65	40	100	60	490	440	360	260	180	1164	1120	190	740	100	500	4xØ24 (M20)	164	H95B
40-200/110/P	A	65	40	100	60	490	440	360	260	180	1164	1120	190	740	100	500	4xØ24 (M20)	164	H95B
40-250/110A/P	A	65	40	100	75	540	490	360	280	225	1164	1250	205	840	100	520	4xØ24 (M20)	191	H95B
40-250/110/P	A	65	40	100	75	540	490	360	280	225	1164	1250	205	840	100	520	4xØ24 (M20)	191	H95B
40-250/150/P	A	65	40	100	75	540	490	360	280	225	1164	1250	205	840	100	520	4xØ24 (M20)	208	H95B
40-250/185/P	A	65	40	100	75	540	490	360	280	225	1164	1250	205	840	100	520	4xØ24 (M20)	221	H95B
40-250/220/W	A	65	40	100	75	540	490	360	280	225	1224	1250	205	840	100	559	4xØ24 (M20)	288	H110A
50-125/30/P	A	65	50	100	60	390	350	360	232	160	939	900	150	600	100	392	4xØ19 (M16)	91	H80C
50-125/40/P	A	65	50	100	60	390	350	360	232	160	942	900	150	600	100	400	4xØ19 (M16)	96	H80C
50-125/55/P	A	65	50	100	60	450	400	360	232	160	1007	1000	170	660	100	423	4xØ24 (M20)	125	H95A
50-125/75/P	A	65	50	100	60	450	400	360	232	160	1007	1000	170	660	100	423	4xØ24 (M20)	129	H95A
50-160/55/P	A	65	50	100	60	450	400	360	260	180	1007	1000	170	660	100	451	4xØ24 (M20)	132	H95A
50-160/75/P	A	65	50	100	60	450	400	360	260	180	1007	1000	170	660	100	451	4xØ24 (M20)	136	H95A
50-160/110A/P	A	65	50	100	60	490	440	360	260	180	1164	1120	190	740	100	500	4xØ24 (M20)	165	H95B
50-160/110/P	A	65	50	100	60	490	440	360	260	180	1164	1120	190	740	100	500	4xØ24 (M20)	165	H95B
50-200/110A/P	A	65	50	100	60	490	440	360	260	200	1164	1120	190	740	100	500	4xØ24 (M20)	166	H95B
50-200/110/P	A	65	50	100	60	490	440	360	260	200	1164	1120	190	740	100	500	4xØ24 (M20)	166	H95B
50-200/150/P	A	65	50	100	60	490	440	360	260	200	1164	1120	190	740	100	500	4xØ24 (M20)	183	H95B
50-200/185/P	A	65	50	100	60	490	440	360	260	200	1164	1120	190	740	100	500	4xØ24 (M20)	196	H95B
50-250/150/P	A	65	50	100	75	540	490	360	280	225	1164	1250	205	840	100	520	4xØ24 (M20)	209	H95B
50-250/185/P	A	65	50	100	75	540	490	360	280	225	1164	1250	205	840	100	520	4xØ24 (M20)	222	H95B
50-250/220/W	A	65	50	100	75	540	490	360	280	225	1124	1250	205	840	100	559	4xØ24 (M20)	289	H110A
50-250/300/W	A	65	50	100	75	610	550	360	310	225	1327	1400	230	940	100	627	4xØ28 (M24)	371	H125A
50-315/370/W	B	65	50	125	110	560	520	470	355	280	1502	1350	110	1130	140	672	6xØ19 (M16)	466	H125C
50-315/450/W	B	65	50	125	110	560	520	470	355	280	1591	1350	110	1130	140	739	6xØ19 (M16)	611	H125C
50-315/550/W	B	65	50	125	110	750	710	470	405	280	1700	1550	110	1330	140	807	6xØ19 (M16)	738	H140A
50-315/750/W	B	65	50	125	110	750	710	470	405	280	1806	1550	110	1330	140	877	6xØ19 (M16)	967	H160A
65-125/40/P	A	80	65	100	75	390	350	360	260	180	942	900	150	600	100	440	4xØ19 (M16)	107	H80C
65-125/55/P	A	80	65	100	75	450	400	360	260	180	1007	1000	170	660	100	451	4xØ24 (M20)	136	H95A
65-125/75/P	A	80	65	100	75	450	400	360	260	180	1007	1000	170	660	100	451	4xØ24 (M20)	140	H95A
65-125/110A/P	A	80	65	100	75	490	440	360	260	180	1164	1120	190	740	100	500	4xØ24 (M20)	170	H95B
65-125/110/P	A	80	65	100	75	490	440	360	260	180	1164	1120	190	740	100	500	4xØ24 (M20)	170	H95B
65-160/75/P	A	80	65	100	75	490	440	360	260	200	1007	1120	190	740	100	460	4xØ24 (M20)	161	H95A
65-160/110A/P	A	80	65	100	75	540	490	360	260	200	1164	1250	205	840	100	500	4xØ24 (M20)	191	H95B
65-160/110/P	A	80	65	100	75	540	490	360	260	200	1164	1250	205	840	100	500	4xØ24 (M20)	191	H95B
65-160/150/P	A	80	65	100	75	540	490	360	260	200	1164	1250	205	840	100	500	4xØ24 (M20)	208	H95B
65-160/185/P	A	80	65	100	75	540	490	360	260	200	1164	1250	205	840	100	500	4xØ24 (M20)	221	H95B
65-200/110/P	A	80	65	100	75	540	490	360	280	225	1204	1250	205	840	140	520	4xØ24 (M20)	194	H95G
65-200/150/P	A	80	65	100	75	540	490	360	280	225	1204	1250	205	840	140	520	4xØ24 (M20)	211	H95G
65-200/185/P	A	80	65	100	75	540	490	360	280	225	1204	1250	205	840	140	520	4xØ24 (M20)	224	H95G
65-200/220/W	A	80	65	100	75	540	490	360	280	225	1264	1250	205	840	140	559	4xØ24 (M20)	291	H110E
65-200/300/W	A	80	65	100	75	610	550	360	310	225	1367	1400	230	940	140	627	4xØ28 (M24)	373	H125H
65-250/220/W	A	80	65	100	90	540	490	470	310	250	1374	1250	205	840	140	588	4xØ24 (M20)	309	H110B
65-250/300/W	A	80	65	100	90	610	550	470	310	250	1477	1400	230	940	140	627	4xØ28 (M24)	391	H125C
65-250/370/W	A	80	65	100	90	610	550	470	310	250	1477	1400	230	940	140	627	4xØ28 (M24)	412	H125C
65-250/450/W	A	80	65	100	90	610	550	470	365	250	1566	1400	230	940	140	719	4xØ28 (M24)	563	H125C
65-250/550/W	A	80	65	100	90	660	600	470	390	250	1675	1600	270	1060	140	792	4xØ28 (M24)	672	H140A
65-315/550/W	B	80	65	125	110	750	710	470	405	280	1700	1550	110	1330	140	807	6xØ19 (M16)	746	H140A
65-315/750/W	B	80	65	125	110	750	710	470	390	280	1806	1550	110	1330	140	862	6xØ19 (M16)	964	H160A
65-315/900/W	B	80	65	125	110	750	710	470	390	280	1806	1550	110	1330	140	862	6xØ19 (M16)	999	H160A

NOTE: Pumps with flanges according to EN 1092-2 as standard.

Nscc40-65-2p50-en_c_td

Available ASME B16.5 version on request. For flanges dimensions see drawing.

NSCC 80, 100, 125 SERIES (SPACER COUPLING)
DIMENSIONS AND WEIGHTS AT 50 Hz, 2 POLES

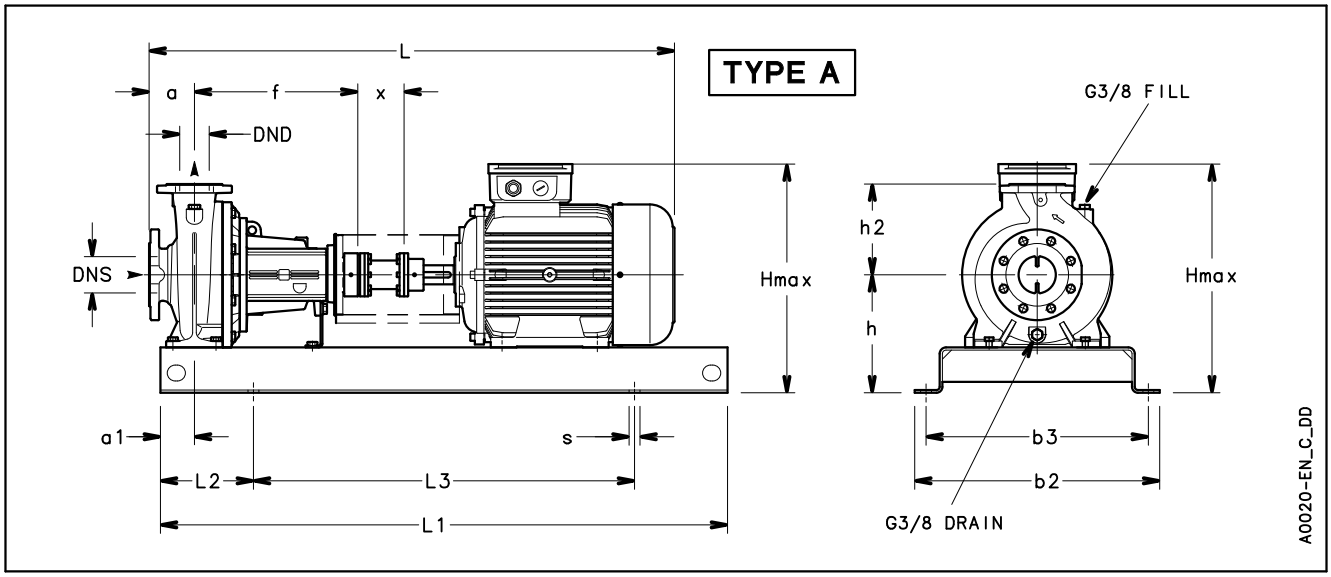

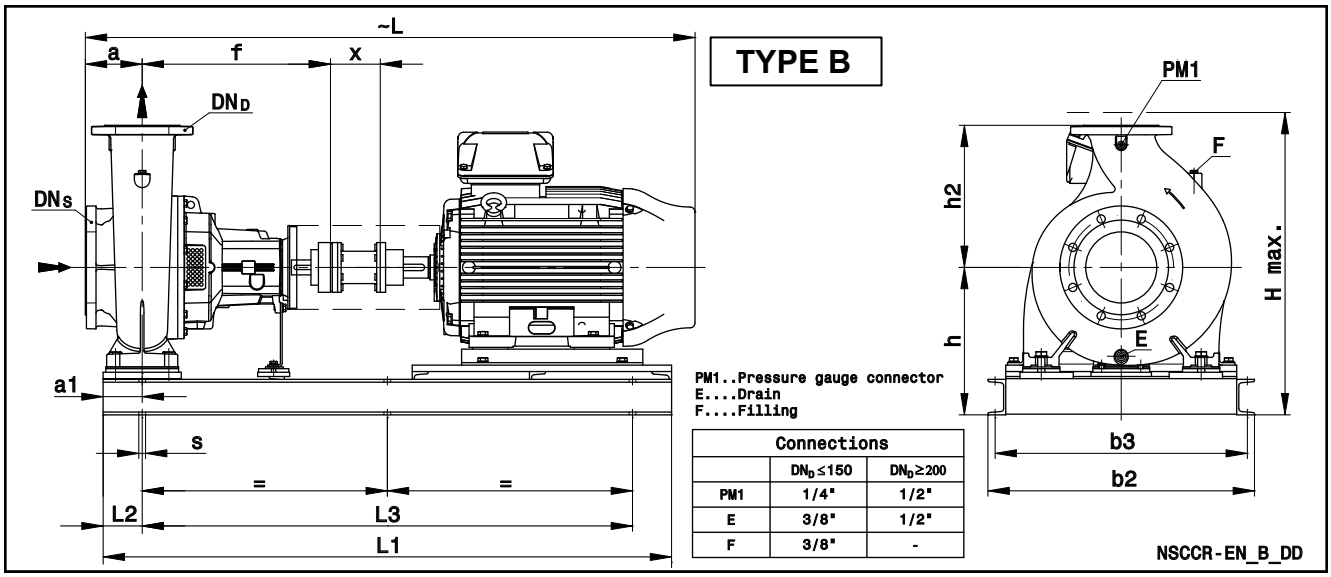

Connections		
	$DN_D \leq 150$	$DN_D \geq 200$
PM1	1/4"	1/2"
E	3/8"	1/2"
F	3/8"	-

LOWARA
a xylem brand

NSCC 80, 100, 125 SERIES (SPACER COUPLING)
DIMENSIONS AND WEIGHTS AT 50 Hz, 2 POLES

PUMP TYPE NSCC..2	TYPE	DIMENSIONS (mm)																WEIGHT (kg)	COUPLING TYPE
		DNS	DND	a	a1	b2	b3	f	h	h2	L	L1	L2	L3	x	H max	s FOR SCREWS	G	
80-160/110/P	A	100	80	125	75	540	490	360	280	225	1229	1250	205	840	140	520	4xØ24 (M20)	197	H95F
80-160/150/P	A	100	80	125	75	540	490	360	280	225	1229	1250	205	840	140	520	4xØ24 (M20)	214	H95F
80-160/185/P	A	100	80	125	75	540	490	360	280	225	1229	1250	205	840	140	520	4xØ24 (M20)	227	H95F
80-160/220/W	A	100	80	125	75	540	490	360	280	225	1289	1250	205	840	140	559	4xØ24 (M20)	294	H110E
80-200/220/W	A	100	80	125	75	540	490	470	280	250	1399	1250	205	840	140	559	4xØ24 (M20)	311	H110B
80-200/300/W	A	100	80	125	75	610	550	470	310	250	1502	1400	230	940	140	627	4xØ28 (M24)	393	H125C
80-200/370/W	A	100	80	125	75	610	550	470	310	250	1502	1400	230	940	140	627	4xØ28 (M24)	414	H125C
80-200/450/W	A	100	80	125	75	610	550	470	365	250	1591	1400	230	940	140	749	4xØ28 (M24)	565	H125C
80-250/370/W	A	100	80	125	90	610	550	470	310	280	1502	1400	230	940	140	627	4xØ28 (M24)	417	H125C
80-250/450/W	A	100	80	125	90	610	550	470	365	280	1591	1400	230	940	140	749	4xØ28 (M24)	568	H125C
80-250/550/W	A	100	80	125	90	660	600	470	390	280	1700	1600	270	1060	140	792	4xØ28 (M24)	677	H140A
80-250/750/W	A	100	80	125	90	730	670	470	420	280	1806	1800	300	1200	140	892	4xØ28 (M24)	945	H160A
80-316/900/W	B	100	80	125	110	750	710	530	440	315	1866	1600	110	1380	140	912	6xØ19 (M16)	1068	H160B
80-316/1100/W	B	100	80	125	110	860	810	530	505	315	2039	1850	110	1630	140	1035	6xØ26 (M20)	1346	H160B
80-316/1320/W	B	100	80	125	110	860	810	530	505	315	2039	1850	110	1630	140	1035	6xØ26 (M20)	1432	H160B
80-316/1600/W	B	100	80	125	110	860	810	530	505	315	2039	1850	110	1630	140	1035	6xØ26 (M20)	1513	H160B
100-160/150/P	B	125	100	125	110	670	630	470	365	280	1339	1330	110	1110	140	645	6xØ19 (M16)	307	H95E
100-160/185/P	B	125	100	125	110	670	630	470	365	280	1339	1330	110	1110	140	645	6xØ19 (M16)	314	H95E
100-160/220/W	B	125	100	125	110	670	630	470	385	280	1399	1330	110	1110	140	665	6xØ19 (M16)	388	H110B
100-160/300/W	B	125	100	125	110	560	520	470	330	280	1502	1350	110	1130	140	647	6xØ19 (M16)	426	H125C
100-200/300/W	B	125	100	125	110	560	520	470	330	280	1502	1350	110	1130	140	647	6xØ19 (M16)	434	H125C
100-200/370/W	B	125	100	125	110	560	520	470	330	280	1502	1350	110	1130	140	647	6xØ19 (M16)	455	H125C
100-200/450/W	B	125	100	125	110	560	520	470	355	280	1591	1350	110	1130	140	739	6xØ19 (M16)	613	H125C
100-200/550/W	B	125	100	125	110	750	710	470	405	280	1700	1550	110	1330	140	807	6xØ19 (M16)	741	H140A
100-250/450/W	B	125	100	140	110	560	520	470	355	280	1606	1350	110	1130	140	739	6xØ19 (M16)	616	H125C
100-250/550/W	B	125	100	140	110	750	710	470	405	280	1715	1550	110	1330	140	807	6xØ19 (M16)	744	H140A
100-250/750/W	B	125	100	140	110	750	710	470	390	280	1821	1550	110	1330	140	862	6xØ19 (M16)	962	H160A
100-250/900/W	B	125	100	140	110	750	710	470	390	280	1821	1550	110	1330	140	862	6xØ19 (M16)	997	H160A
100-316/1100/W	B	125	100	140	110	860	810	530	505	315	2054	1850	110	1630	140	1035	6xØ26 (M20)	1349	H160B
100-316/1320/W	B	125	100	140	110	860	810	530	505	315	2054	1850	110	1630	140	1035	6xØ26 (M20)	1435	H160B
100-316/1600/W	B	125	100	140	110	860	810	530	505	315	2054	1850	110	1630	140	1035	6xØ26 (M20)	1516	H160B
125-200/450/W	B	150	125	140	110	560	520	470	355	315	1606	1350	110	1130	140	739	6xØ19 (M16)	621	H125C
125-200/550/W	B	150	125	140	110	750	710	470	405	315	1715	1550	110	1330	140	807	6xØ19 (M16)	748	H140A
125-200/750/W	B	150	125	140	110	750	710	470	405	315	1821	1550	110	1330	140	877	6xØ19 (M16)	977	H160A
125-200/900/W	B	150	125	140	110	750	710	470	405	315	1821	1550	110	1330	140	877	6xØ19 (M16)	1012	H160A
125-315/1100/W	B	150	125	140	110	860	810	530	505	355	2054	1850	110	1630	140	1035	6xØ26 (M20)	1351	H160B
125-315/1320/W	B	150	125	140	110	860	810	530	505	355	2054	1850	110	1630	140	1035	6xØ26 (M20)	1437	H160B
125-315/1600/W	B	150	125	140	110	860	810	530	505	355	2054	1850	110	1630	140	1035	6xØ26 (M20)	1518	H160B
125-315/2000/W	B	150	125	140	110	860	810	530	505	355	2163	1850	110	1630	140	1080	6xØ26 (M20)	1699	H180A

NOTE: Pumps with flanges according to EN 1092-2 as standard.

Nscc80-125_2p50-en_c_td

Available ASME B16.5 version on request. For flanges dimensions see drawing.

LOWARA
a xylem brand

NSCC 32 SERIES (SPACER COUPLING)
DIMENSIONS AND WEIGHTS AT 50 Hz, 4 POLES

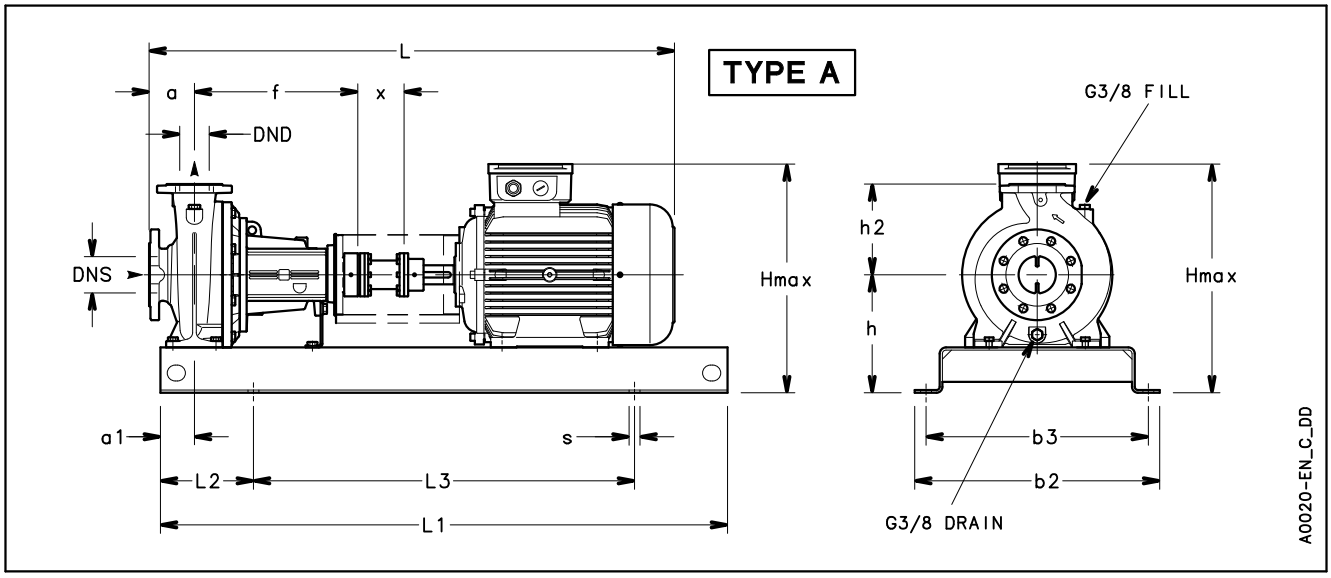

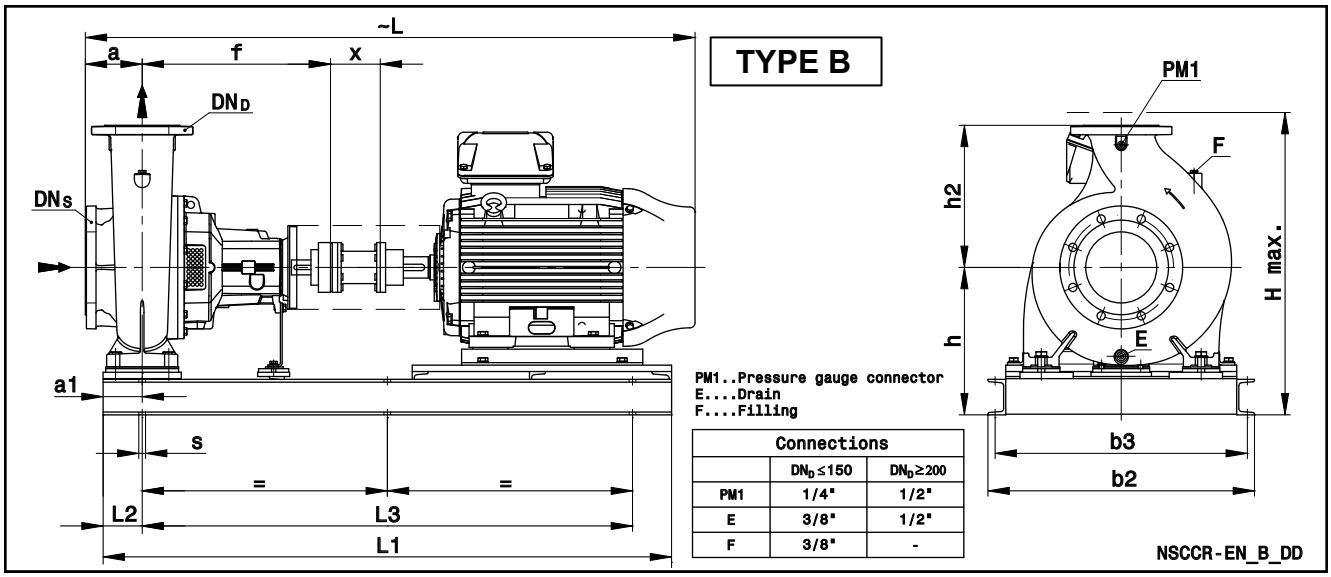

Connections		
	$DN_D \leq 150$	$DN_D \geq 200$
PM1	1/4"	1/2"
E	3/8"	1/2"
F	3/8"	-

PUMP TYPE NSCC..4	TYPE	DIMENSIONS (mm)																WEIGHT	COUPLING TYPE
		DNS	DND	a	a1	b2	b3	f	h	h2	L	L1	L2	L3	x	H max	s FOR SCREWS	kg	
32-125/02B/S	A	50	32	80	60	360	320	360	212	140	801	800	130	540	100	352	4xØ19 (M16)	64	H80D
32-125/02A/S	A	50	32	80	60	360	320	360	212	140	801	800	130	540	100	352	4xØ19 (M16)	64	H80D
32-125/02/S	A	50	32	80	60	360	320	360	212	140	801	800	130	540	100	352	4xØ19 (M16)	64	H80D
32-125/03/S	A	50	32	80	60	360	320	360	212	140	801	800	130	540	100	352	4xØ19 (M16)	65	H80D
32-160/02/S	A	50	32	80	60	360	320	360	232	160	801	800	130	540	100	392	4xØ19 (M16)	65	H80D
32-160/03/S	A	50	32	80	60	360	320	360	232	160	801	800	130	540	100	392	4xØ19 (M16)	66	H80D
32-160/05A/S	A	50	32	80	60	360	320	360	232	160	843	800	130	540	100	392	4xØ19 (M16)	69	H80A
32-160/05/S	A	50	32	80	60	360	320	360	232	160	843	800	130	540	100	392	4xØ19 (M16)	69	H80A
32-200/05A/S	A	50	32	80	60	360	320	360	260	180	843	800	130	540	100	440	4xØ19 (M16)	76	H80A
32-200/05/S	A	50	32	80	60	360	320	360	260	180	843	800	130	540	100	440	4xØ19 (M16)	76	H80A
32-200/07/X	A	50	32	80	60	360	320	360	260	180	811	800	130	540	100	440	4xØ19 (M16)	79	H80A
32-200/11/P	A	50	32	80	60	390	350	360	260	180	888	900	150	600	100	440	4xØ19 (M16)	88	H80B
32-250/11A/P	A	50	32	100	75	450	400	360	280	225	908	1000	170	660	100	505	4xØ24 (M20)	115	H80B
32-250/11/P	A	50	32	100	75	450	400	360	280	225	908	1000	170	660	100	505	4xØ24 (M20)	115	H80B
32-250/15/P	A	50	32	100	75	450	400	360	280	225	908	1000	170	660	100	505	4xØ24 (M20)	120	H80B
32-250/22/P	A	50	32	100	75	450	400	360	280	225	985	1000	170	660	100	505	4xØ24 (M20)	130	H80C

NOTE: Pumps with flanges according to EN 1092-2 as standard.

Nscc32_4p50-en_c_td

Available ASME B16.5 version on request. For flanges dimensions see drawing.

LOWARA
a xylem brand

NSCC 40, 50, 65 SERIES (SPACER COUPLING)
DIMENSIONS AND WEIGHTS AT 50 Hz, 4 POLES

PUMP TYPE NSCC..4	TYPE	DIMENSIONS (mm)																WEIGHT	COUPLING TYPE
		DNS	DND	a	a1	b2	b3	f	h	h2	L	L1	L2	L3	x	H max	s FOR SCREWS	kg	
40-125/02A/S	A	65	40	80	60	360	320	360	212	140	801	800	130	540	100	352	4xØ19 (M16)	65	H80D
40-125/02/S	A	65	40	80	60	360	320	360	212	140	801	800	130	540	100	352	4xØ19 (M16)	65	H80D
40-125/03/S	A	65	40	80	60	360	320	360	212	140	801	800	130	540	100	352	4xØ19 (M16)	66	H80D
40-125/05/S	A	65	40	80	60	360	320	360	212	140	843	800	130	540	100	352	4xØ19 (M16)	69	H80A
40-160/03/S	A	65	40	80	60	360	320	360	232	160	801	800	130	540	100	392	4xØ19 (M16)	67	H80D
40-160/05/S	A	65	40	80	60	360	320	360	232	160	843	800	130	540	100	392	4xØ19 (M16)	70	H80A
40-160/07/X	A	65	40	80	60	360	320	360	232	160	811	800	130	540	100	392	4xØ19 (M16)	73	H80A
40-160/11/P	A	65	40	80	60	390	350	360	232	160	888	900	150	600	100	392	4xØ19 (M16)	82	H80B
40-200/07/X	A	65	40	100	60	390	350	360	260	180	831	900	150	600	100	440	4xØ19 (M16)	84	H80A
40-200/11/P	A	65	40	100	60	390	350	360	260	180	908	900	150	600	100	440	4xØ19 (M16)	90	H80B
40-200/15A/P	A	65	40	100	60	390	350	360	260	180	908	900	150	600	100	440	4xØ19 (M16)	95	H80B
40-200/15/P	A	65	40	100	60	390	350	360	260	180	908	900	150	600	100	440	4xØ19 (M16)	95	H80B
40-250/11/P	A	65	40	100	75	450	400	360	280	225	908	1000	170	660	100	505	4xØ24 (M20)	115	H80E
40-250/15/P	A	65	40	100	75	450	400	360	280	225	908	1000	170	660	100	505	4xØ24 (M20)	121	H80B
40-250/22A/P	A	65	40	100	75	450	400	360	280	225	985	1000	170	660	100	505	4xØ24 (M20)	131	H80C
40-250/22/P	A	65	40	100	75	450	400	360	280	225	985	1000	170	660	100	505	4xØ24 (M20)	131	H80C
40-250/30/P	A	65	40	100	75	450	400	360	280	225	1002	1000	170	660	100	505	4xØ24 (M20)	136	H80C
50-125/03/S	A	65	50	100	60	360	320	360	232	160	821	800	130	540	100	392	4xØ19 (M16)	69	H80D
50-125/05/S	A	65	50	100	60	360	320	360	232	160	863	800	130	540	100	392	4xØ19 (M16)	72	H80A
50-125/07/X	A	65	50	100	60	360	320	360	232	160	831	800	130	540	100	392	4xØ19 (M16)	75	H80A
50-125/11/P	A	65	50	100	60	390	350	360	232	160	908	900	150	600	100	392	4xØ19 (M16)	84	H80B
50-160/07/X	A	65	50	100	60	390	350	360	260	180	831	900	150	600	100	440	4xØ19 (M16)	85	H80A
50-160/11A/P	A	65	50	100	60	390	350	360	260	180	908	900	150	600	100	440	4xØ19 (M16)	91	H80B
50-160/11/P	A	65	50	100	60	390	350	360	260	180	908	900	150	600	100	440	4xØ19 (M16)	91	H80B
50-160/15/P	A	65	50	100	60	390	350	360	260	180	908	900	150	600	100	440	4xØ19 (M16)	96	H80B
50-200/11/P	A	65	50	100	60	390	350	360	260	200	908	900	150	600	100	460	4xØ19 (M16)	92	H80B
50-200/15/P	A	65	50	100	60	390	350	360	260	200	908	900	150	600	100	460	4xØ19 (M16)	97	H80B
50-200/22A/P	A	65	50	100	60	390	350	360	260	200	985	900	150	600	100	460	4xØ19 (M16)	107	H80C
50-200/22/P	A	65	50	100	60	390	350	360	260	200	985	900	150	600	100	460	4xØ19 (M16)	107	H80C
50-250/22A/P	A	65	50	100	75	450	400	360	280	225	985	1000	170	660	100	505	4xØ24 (M20)	132	H80C
50-250/22/P	A	65	50	100	75	450	400	360	280	225	985	1000	170	660	100	505	4xØ24 (M20)	132	H80C
50-250/30/P	A	65	50	100	75	450	400	360	280	225	1002	1000	170	660	100	505	4xØ24 (M20)	137	H80C
50-250/40/P	A	65	50	100	75	450	400	360	280	225	1002	1000	170	660	100	505	4xØ24 (M20)	156	H80C
50-315/40/P	B	65	50	125	110	670	630	470	365	280	1177	1100	110	880	140	645	6xØ19 (M16)	249	H95C
50-315/55/P	B	65	50	125	110	670	630	470	385	280	1220	1100	110	880	140	665	6xØ19 (M16)	260	H95D
50-315/75/P	B	65	50	125	110	670	630	470	385	280	1220	1100	110	880	140	665	6xØ19 (M16)	260	H95D
50-315/110/P	B	65	50	125	110	670	630	470	365	280	1339	1330	110	1110	140	645	6xØ19 (M16)	293	H95E
65-125/05/S	A	80	65	100	75	390	350	360	260	180	863	900	150	600	100	440	4xØ19 (M16)	86	H80A
65-125/07/X	A	80	65	100	75	390	350	360	260	180	831	900	150	600	100	440	4xØ19 (M16)	89	H80A
65-125/11/P	A	80	65	100	75	390	350	360	260	180	908	900	150	600	100	440	4xØ19 (M16)	95	H80B
65-125/15/P	A	80	65	100	75	390	350	360	260	180	908	900	150	600	100	440	4xØ19 (M16)	100	H80B
65-160/11A/P	A	80	65	100	75	450	400	360	260	200	908	1000	170	660	100	460	4xØ24 (M20)	116	H80B
65-160/11/P	A	80	65	100	75	450	400	360	260	200	908	1000	170	660	100	460	4xØ24 (M20)	116	H80B
65-160/15/P	A	80	65	100	75	450	400	360	260	200	908	1000	170	660	100	460	4xØ24 (M20)	121	H80B
65-160/22A/P	A	80	65	100	75	450	400	360	260	200	985	1000	170	660	100	460	4xØ24 (M20)	131	H80C
65-160/22/P	A	80	65	100	75	450	400	360	260	200	985	1000	170	660	100	460	4xØ24 (M20)	131	H80C
65-200/15/P	A	80	65	100	75	450	400	360	280	225	948	1000	170	660	140	505	4xØ24 (M20)	124	H80E
65-200/22A/P	A	80	65	100	75	490	440	360	280	225	1025	1120	190	740	140	505	4xØ24 (M20)	140	H80F
65-200/22/P	A	80	65	100	75	490	440	360	280	225	1025	1120	190	740	140	505	4xØ24 (M20)	140	H80F
65-200/30/P	A	80	65	100	75	490	440	360	280	225	1042	1120	190	740	140	505	4xØ24 (M20)	145	H80F
65-200/40/P	A	80	65	100	75	490	440	360	280	225	1042	1120	190	740	140	505	4xØ24 (M20)	164	H80F
65-250/30/P	A	80	65	100	90	490	440	470	310	250	1135	1120	190	740	140	560	4xØ24 (M20)	164	H95C
65-250/40/P	A	80	65	100	90	490	440	470	310	250	1152	1120	190	740	140	560	4xØ24 (M20)	183	H95C
65-250/55A/P	A	80	65	100	90	490	440	470	310	250	1195	1120	190	740	140	560	4xØ24 (M20)	192	H95C
65-250/55/P	A	80	65	100	90	490	440	470	310	250	1195	1120	190	740	140	560	4xØ24 (M20)	192	H95C
65-250/75/P	A	80	65	100	90	490	440	470	310	250	1195	1120	190	740	140	560	4xØ24 (M20)	196	H95C
65-315/55/P	B	80	65	125	110	670	630	470	385	280	1220	1100	110	880	140	665	6xØ19 (M16)	267,2	H95D
65-315/75/P	B	80	65	125	110	670	630	470	385	280	1220	1100	110	880	140	665	6xØ19 (M16)	267,2	H95D
65-315/110/P	B	80	65	125	110	670	630	470	365	280	1339	1330	110	1110	140	645	6xØ19 (M16)	300	H95E
65-315/150/P	B	80	65	125	110	670	630	470	365	280	1339	1330	110	1110	140	645	6xØ19 (M16)	345,6	H110E

NOTE: Pumps with flanges according to EN 1092-2 as standard.

Nscc40-65_4p50-en_c_td

Available ASME B16.5 version on request. For flanges dimensions see drawing.

NSCC 80, 100, 125 SERIES (SPACER COUPLING)
DIMENSIONS AND WEIGHTS AT 50 Hz, 4 POLES

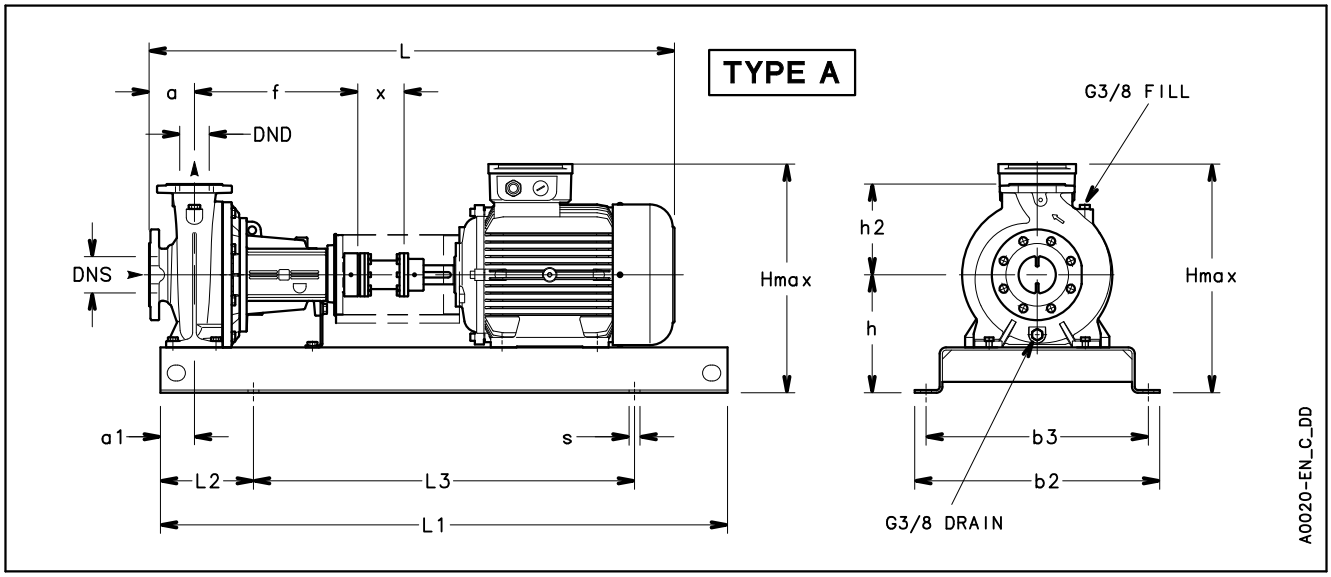

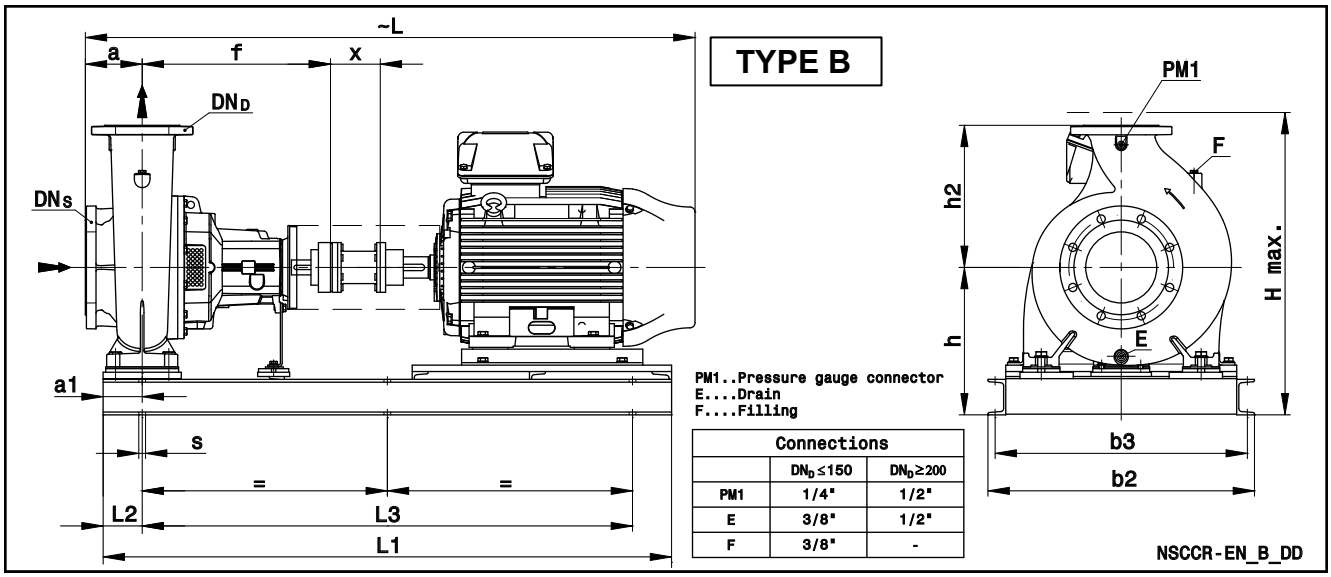

Connections		
	$DN_D \leq 150$	$DN_D \geq 200$
PM1	1/4"	1/2"
E	3/8"	1/2"
F	3/8"	-

LOWARA
a xylem brand

NSCC 80, 100, 125 SERIES (SPACER COUPLING)
DIMENSIONS AND WEIGHTS AT 50 Hz, 4 POLES

PUMP TYPE NSCC..4	TYPE	DIMENSIONS (mm)																WEIGHT (kg)	COUPLING TYPE
		DNS	DND	a	a1	b2	b3	f	h	h2	L	L1	L3	L2	x	H max	s FOR SCREWS	G	
80-160/15/P	A	100	80	125	75	450	400	360	280	225	973	1000	170	660	140	505	4xØ24 (M20)	127	H80E
80-160/22A/P	A	100	80	125	75	490	440	360	280	225	1050	1120	190	740	140	505	4xØ24 (M20)	143	H80F
80-160/22/P	A	100	80	125	75	490	440	360	280	225	1050	1120	190	740	140	505	4xØ24 (M20)	143	H80F
80-160/30/P	A	100	80	125	75	490	440	360	280	225	1067	1120	190	740	140	505	4xØ24 (M20)	148	H80F
80-200/30/P	A	100	80	125	75	490	440	470	280	250	1177	1120	190	740	140	530	4xØ24 (M20)	165	H80G
80-200/40/P	A	100	80	125	75	490	440	470	280	250	1177	1120	190	740	140	530	4xØ24 (M20)	185	H80G
80-200/55A/P	A	100	80	125	75	490	440	470	280	250	1220	1120	190	740	140	530	4xØ24 (M20)	194	H95C
80-200/55/P	A	100	80	125	75	490	440	470	280	250	1220	1120	190	740	140	530	4xØ24 (M20)	194	H95C
80-250/55A/P	A	100	80	125	90	540	490	470	310	280	1220	1250	205	840	140	590	4xØ24 (M20)	203	H95C
80-250/55/P	A	100	80	125	90	540	490	470	310	280	1220	1250	205	840	140	590	4xØ24 (M20)	203	H95C
80-250/75/P	A	100	80	125	90	540	490	470	310	280	1220	1250	205	840	140	590	4xØ24 (M20)	207	H95C
80-250/110/P	A	100	80	125	90	540	490	470	310	280	1339	1250	205	840	140	590	4xØ24 (M20)	262	H95E
80-315/110A/P	B	100	80	125	110	670	630	470	365	315	1339	1330	1110	110	140	680	6xØ19 (M16)	308,8	H95E
80-315/110/P	B	100	80	125	110	670	630	470	365	315	1339	1330	1110	110	140	680	6xØ19 (M16)	308,8	H95E
80-315/150/P	B	100	80	125	110	670	630	470	365	315	1339	1330	1110	110	140	680	6xØ19 (M16)	354,4	H110E
80-315/185/W	B	100	80	125	110	670	630	470	385	315	1399	1330	1110	110	140	700	6xØ19 (M16)	413,3	H110B
80-315/220/W	B	100	80	125	110	670	630	470	385	315	1437	1330	1110	110	140	700	6xØ19 (M16)	431,3	H110B
80-400/185/W	B	100	80	125	110	670	630	530	400	355	1459	1430	1210	110	140	755	6xØ19 (M16)	445,9	H110C
80-400/220/W	B	100	80	125	110	670	630	530	400	355	1497	1430	1210	110	140	755	6xØ19 (M16)	463,9	H110C
80-400/300/W	B	100	80	125	110	670	630	530	420	355	1562	1430	1210	110	140	775	6xØ19 (M16)	517,5	H125D
80-400/370/W	B	100	80	125	110	750	710	530	415	355	1681	1600	1380	110	140	799	6xØ19 (M16)	708,4	H140B
100-160/22A/P	B	125	100	125	110	670	630	470	355	280	1160	1100	880	110	140	635	6xØ19 (M16)	219	H95C
100-160/22/P	B	125	100	125	110	670	630	470	355	280	1160	1100	880	110	140	635	6xØ19 (M16)	219	H95C
100-160/30/P	B	125	100	125	110	670	630	470	355	280	1177	1100	880	110	140	635	6xØ19 (M16)	222	H95C
100-160/40/P	B	125	100	125	110	670	630	470	365	280	1177	1100	880	110	140	645	6xØ19 (M16)	243	H95C
100-200/40/P	B	125	100	125	110	670	630	470	365	280	1177	1100	880	110	140	645	6xØ19 (M16)	251	H95C
100-200/55/P	B	125	100	125	110	670	630	470	385	280	1220	1100	880	110	140	665	6xØ19 (M16)	262	H95D
100-200/75/P	B	125	100	125	110	670	630	470	385	280	1220	1100	880	110	140	665	6xØ19 (M16)	262	H95D
100-250/55/P	B	125	100	140	110	670	630	470	385	280	1235	1100	880	110	140	665	6xØ19 (M16)	265	H95D
100-250/75/P	B	125	100	140	110	670	630	470	385	280	1235	1100	880	110	140	665	6xØ19 (M16)	265	H95D
100-250/110/P	B	125	100	140	110	670	630	470	365	280	1354	1330	1110	110	140	645	6xØ19 (M16)	298	H95E
100-315/110/P	B	125	100	140	110	670	630	470	365	315	1354	1330	1110	110	140	680	6xØ19 (M16)	307	H95E
100-315/150/P	B	125	100	140	110	670	630	470	365	315	1354	1330	1110	110	140	680	6xØ19 (M16)	352	H110E
100-315/185/W	B	125	100	140	110	670	630	470	385	315	1414	1330	1110	110	140	700	6xØ19 (M16)	411	H110B
100-315/220/W	B	125	100	140	110	670	630	470	385	315	1452	1330	1110	110	140	700	6xØ19 (M16)	429	H110B
100-315/300/W	B	125	100	140	110	560	520	470	355	315	1517	1350	1130	110	140	672	6xØ19 (M16)	458	H125C
100-400/300/W	B	125	100	140	110	670	630	530	420	355	1577	1430	1210	110	140	775	6xØ19 (M16)	547	H125D
100-400/370/W	B	125	100	140	110	750	710	530	415	355	1696	1600	1380	110	140	799	6xØ19 (M16)	734	H140B
100-400/450/W	B	125	100	140	110	750	710	530	415	355	1696	1600	1380	110	140	799	6xØ19 (M16)	762	H140B
125-200/55/P	B	150	125	140	110	670	630	470	385	315	1235	1100	880	110	140	700	6xØ19 (M16)	270	H95D
125-200/75/P	B	150	125	140	110	670	630	470	385	315	1235	1100	880	110	140	700	6xØ19 (M16)	270	H95D
125-200/110/P	B	150	125	140	110	670	630	470	365	315	1354	1330	1110	110	140	680	6xØ19 (M16)	303	H95E
125-250/75/P	B	150	125	140	110	670	630	470	385	355	1235	1100	880	110	140	740	6xØ19 (M16)	270	H95D
125-250/110/P	B	150	125	140	110	670	630	470	365	355	1354	1330	1110	110	140	720	6xØ19 (M16)	303	H95E
125-250/150/P	B	150	125	140	110	670	630	470	365	355	1354	1330	1110	110	140	720	6xØ19 (M16)	348	H110E
125-315/185/W	B	150	125	140	110	670	630	530	400	355	1474	1430	1210	110	140	755	6xØ19 (M16)	447	H110C
125-315/220/W	B	150	125	140	110	670	630	530	400	355	1512	1430	1210	110	140	755	6xØ19 (M16)	465	H110C
125-315/300/W	B	150	125	140	110	670	630	530	420	355	1577	1430	1210	110	140	775	6xØ19 (M16)	521	H125D
125-315/370/W	B	150	125	140	110	750	710	530	415	355	1696	1600	1380	110	140	799	6xØ19 (M16)	708	H140B
125-400/370/W	B	150	125	140	110	750	710	530	440	400	1696	1600	1380	110	140	840	6xØ19 (M16)	759	H140B
125-400/450/W	B	150	125	140	110	750	710	530	440	400	1696	1600	1380	110	140	840	6xØ19 (M16)	787	H140B
125-400/550/W	B	150	125	140	110	750	710	530	440	400	1775	1600	1380	110	140	842	6xØ19 (M16)	872	H160B
125-400/750/W	B	150	125	140	110	750	710	530	440	400	1881	1600	1380	110	140	912	6xØ19 (M16)	1083	H180B

NOTE: Pumps with flanges according to EN 1092-2 as standard.

Nscc80-125_4p50-en_c_td

Available ASME B16.5 version on request. For flanges dimensions see drawing.

LOWARA
a xylem brand

NSCC 150 SERIES (SPACER COUPLING)
DIMENSIONS AND WEIGHTS AT 50 Hz, 4 POLES

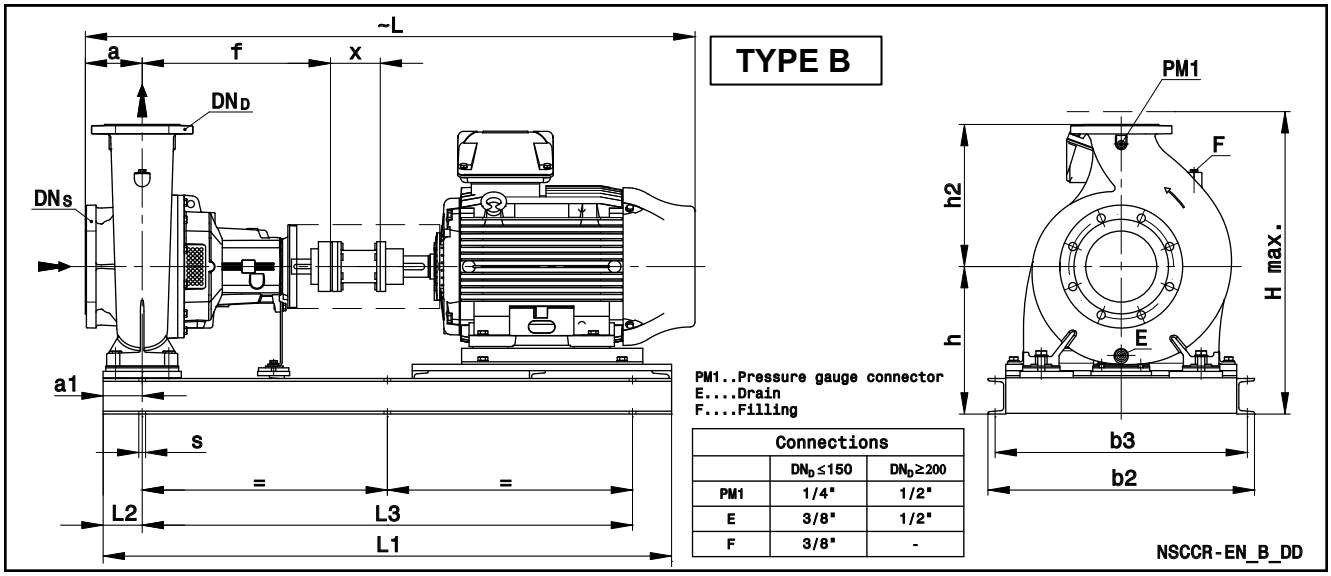

PUMP TYPE NSCC..4	TYPE	DIMENSIONS (mm)														H	s	WEIGHT (kg)	COUPLING TYPE
		DNS	DND	a	a1	b2	b3	f	h	h2	L	L1	L3	L2	x	max	FOR SCREWS	G	
150-200/110A/P	B	200	150	160	110	670	630	470	385	400	1374	1330	1110	110	140	785	6xØ19 (M16)	360	H95E
150-200/110/P	B	200	150	160	110	670	630	470	385	400	1374	1330	1110	110	140	785	6xØ19 (M16)	360	H95E
150-200/150A/P	B	200	150	160	110	670	630	470	385	400	1374	1330	1110	110	140	785	6xØ19 (M16)	405	H110E
150-200/150/P	B	200	150	160	110	670	630	470	385	400	1374	1330	1110	110	140	785	6xØ19 (M16)	405	H110E
150-250/150/P	B	200	150	160	110	670	630	530	385	400	1434	1430	1210	110	140	785	6xØ19 (M16)	416	H110F
150-250/185/W	B	200	150	160	110	670	630	530	400	400	1494	1430	1210	110	140	800	6xØ19 (M16)	475	H110C
150-250/220/W	B	200	150	160	110	670	630	530	400	400	1532	1430	1210	110	140	800	6xØ19 (M16)	493	H110C
150-250/300/W	B	200	150	160	110	670	630	530	420	400	1597	1430	1210	110	140	820	6xØ19 (M16)	549	H125D
150-315/300/W	B	200	150	160	110	670	630	530	420	400	1597	1430	1210	110	140	820	6xØ19 (M16)	555	H125D
150-315/370/W	B	200	150	160	110	750	710	530	415	400	1716	1600	1380	110	140	815	6xØ19 (M16)	742	H140B
150-315/450/W	B	200	150	160	110	750	710	530	415	400	1716	1600	1380	110	140	815	6xØ19 (M16)	770	H140B
150-400/450/W	B	200	150	160	110	750	710	530	440	450	1716	1600	1380	110	140	890	6xØ19 (M16)	815	H140B
150-400/550/W	B	200	150	160	110	750	710	530	440	450	1795	1600	1380	110	140	890	6xØ19 (M16)	900	H160B
150-400/750/W	B	200	150	160	110	750	710	530	440	450	1901	1600	1380	110	140	912	6xØ19 (M16)	1111	H180B
150-400/900/W	B	200	150	160	110	750	710	530	440	450	1901	1600	1380	110	140	912	6xØ19 (M16)	1159	H180B
150-400/1100/W	B	200	150	160	110	750	710	530	440	450	1901	1600	1380	110	140	912	6xØ19 (M16)	1266	H180B
150-500/900/W	B	200	150	180	165	860	810	770	565	500	2271	2000	1670	165	250	1065	6xØ26 (M20)	1403	H180D
150-500/1100/W	B	200	150	180	165	860	810	770	585	500	2474	2250	1920	165	250	1115	6xØ26 (M20)	1702	H200A
150-500/1320/W	B	200	150	180	165	860	810	770	585	500	2474	2250	1920	165	250	1115	6xØ26 (M20)	1787	H200A
150-500/1600/W	B	200	150	180	165	860	810	770	585	500	2474	2250	1920	165	250	1115	6xØ26 (M20)	1844	H200A
150-500/2000/W	B	200	150	180	165	860	810	770	585	500	2583	2250	1920	165	250	1160	6xØ26 (M20)	2033	H225A

NOTE: Pumps with flanges according to EN 1092-2 as standard.

Nscc150_4p50-en_d_td

Available ASME B16.5 version on request. For flanges dimensions see drawing.

LOWARA
a xylem brand

NSCC 200, 250, 300 SERIES (SPACER COUPLING)
DIMENSIONS AND WEIGHTS AT 50 Hz, 4 POLES

PUMP TYPE NSCC..4	TYPE	DIMENSIONS (mm)																WEIGHT (kg)	COUPLING TYPE
		DNS	DND	a	a1	b2	b3	f	h	h2	L	L1	L3	L2	x	H max	s FOR SCREWS	G	
200-250/185/W	B	250	200	180	110	670	630	530	460	475	1574	1450	1230	110	200	935	6xØ19 (M16)	534	H125E
200-250/220/W	B	250	200	180	110	670	630	530	460	475	1612	1450	1230	110	200	935	6xØ19 (M16)	552	H125E
200-250/300A/W	B	250	200	180	110	670	630	530	460	475	1677	1450	1230	110	200	935	6xØ19 (M16)	592	H125F
200-250/300/W	B	250	200	180	110	670	630	530	460	475	1677	1450	1230	110	200	935	6xØ19 (M16)	592	H125F
200-315/300/W	B	250	200	180	110	670	630	530	460	450	1677	1450	1230	110	200	910	6xØ19 (M16)	596	H125F
200-315/370/W	B	250	200	180	110	750	710	530	480	450	1796	1660	1440	110	200	930	6xØ19 (M16)	798	H140C
200-315/450/W	B	250	200	180	110	750	710	530	480	450	1796	1660	1440	110	200	930	6xØ19 (M16)	826	H140C
200-315/550/W	B	250	200	180	110	750	710	530	480	450	1875	1660	1440	110	200	930	6xØ19 (M16)	912	H160C
200-315/750/W	B	250	200	180	110	750	710	530	480	450	1981	1660	1440	110	200	952	6xØ19 (M16)	1123	H180C
200-400/750A/W	B	250	200	180	165	860	810	770	565	500	2271	2000	1670	165	250	1065	6xØ26 (M20)	1310	H180D
200-400/750/W	B	250	200	180	165	860	810	770	565	500	2271	2000	1670	165	250	1065	6xØ26 (M20)	1310	H180D
200-400/900/W	B	250	200	180	165	860	810	770	565	500	2271	2000	1670	165	250	1065	6xØ26 (M20)	1358	H180D
200-400/1100/W	B	250	200	180	165	860	810	770	585	500	2474	2250	1920	165	250	1115	6xØ26 (M20)	1657	H200A
200-400/1320/W	B	250	200	180	165	860	810	770	585	500	2474	2250	1920	165	250	1115	6xØ26 (M20)	1742	H200A
200-500/1320/W	B	250	200	200	165	860	810	770	635	560	2494	2250	1920	165	250	1195	6xØ26 (M20)	1802	H200A
200-500/1600/W	B	250	200	200	165	860	810	770	635	560	2494	2250	1920	165	250	1195	6xØ26 (M20)	1859	H200A
200-500/2000/W	B	250	200	200	165	860	810	770	635	560	2603	2250	1920	165	250	1210	6xØ26 (M20)	2048	H225A
200-500/2500/W	B	250	200	200	165	860	810	770	635	560	2603	2250	1920	165	250	1210	6xØ26 (M20)	2243	H225A
200-500/3150/W	B	250	200	200	165	1000	930	770	675	560	2702	2450	2120	165	250	1300	6xØ29 (M24)	2590	H250A
250-315/370/W	B	300	250	250	165	850	810	530	525	500	1866	1700	1370	165	200	1025	6xØ19 (M16)	911	H140C
250-315/450/W	B	300	250	250	165	850	810	530	525	500	1866	1700	1370	165	200	1025	6xØ19 (M16)	939	H140C
250-315/550/W	B	300	250	250	165	850	810	530	525	500	1945	1700	1370	165	200	1025	6xØ19 (M16)	1025	H160C
250-315/750/W	B	300	250	250	165	850	810	530	525	500	2051	1700	1370	165	200	1025	6xØ19 (M16)	1236	H180C
250-400/750/W	B	300	250	200	165	860	810	770	565	560	2291	2000	1670	165	250	1125	6xØ26 (M20)	1347	H180D
250-400/900/W	B	300	250	200	165	860	810	770	565	560	2291	2000	1670	165	250	1125	6xØ26 (M20)	1395	H180D
250-400/1100/W	B	300	250	200	165	860	810	770	585	560	2494	2250	1920	165	250	1145	6xØ26 (M20)	1694	H200A
250-400/1320/W	B	300	250	200	165	860	810	770	585	560	2494	2250	1920	165	250	1145	6xØ26 (M20)	1779	H200A
250-400/1600/W	B	300	250	200	165	860	810	770	585	560	2494	2250	1920	165	250	1145	6xØ26 (M20)	1836	H200A
250-400/2000/W	B	300	250	200	165	860	810	770	585	560	2603	2250	1920	165	250	1160	6xØ26 (M20)	2025	H225A
250-500/1600/W	B	300	250	200	165	860	810	770	635	670	2494	2250	1920	165	250	1305	6xØ26 (M20)	1910	H200A
250-500/2000/W	B	300	250	200	165	860	810	770	635	670	2603	2250	1920	165	250	1305	6xØ26 (M20)	2099	H225A
250-500/2500/W	B	300	250	200	165	860	810	770	635	670	2603	2250	1920	165	250	1305	6xØ26 (M20)	2294	H225A
250-500/3150/W	B	300	250	200	165	1000	930	770	675	670	2702	2450	2120	165	250	1345	6xØ29 (M24)	2641	H250A
250-500/3550/W	B	300	250	200	165	1000	930	770	675	670	2702	2450	2120	165	250	1345	6xØ29 (M24)	2747	H250A
300-350/750A/W	B	350	300	250	200	960	910	800	620	600	2421	2150	1750	200	300	1220	6xØ26 (M20)	1524	N150A
300-350/750/W	B	350	300	250	200	960	910	800	620	600	2421	2150	1750	200	300	1220	6xØ26 (M20)	1524	N150A
300-350/900/W	B	350	300	250	200	960	910	800	620	600	2421	2150	1750	200	300	1220	6xØ26 (M20)	1572	N150A
300-350/1100/W	B	350	300	250	200	960	910	800	640	600	2624	2400	2000	200	300	1240	6xØ26 (M20)	1877	N176A
300-400/1100/W	B	350	300	250	200	960	910	800	640	600	2624	2400	2000	200	300	1240	6xØ26 (M20)	1881	N176A
300-400/1320/W	B	350	300	250	200	960	910	800	640	600	2624	2400	2000	200	300	1240	6xØ26 (M20)	1966	N176A
300-400/1600/W	B	350	300	250	200	960	910	800	640	600	2624	2400	2000	200	300	1240	6xØ26 (M20)	2023	N176A
300-400/2000/W	B	350	300	250	200	960	910	800	640	600	2733	2400	2000	200	300	1240	6xØ26 (M20)	2206	N185A
300-400/2500/W	B	350	300	250	200	960	910	800	640	600	2733	2400	2000	200	300	1240	6xØ26 (M20)	2401	N185A
300-450/1600/W	B	350	300	250	200	960	910	800	665	630	2624	2400	2000	200	300	1295	6xØ26 (M20)	2065	N176A
300-450/2000/W	B	350	300	250	200	960	910	800	665	630	2733	2400	2000	200	300	1295	6xØ26 (M20)	2247	N185A
300-450/2500/W	B	350	300	250	200	960	910	800	665	630	2733	2400	2000	200	300	1295	6xØ26 (M20)	2442	N185A
300-450/3150/W	B	350	300	250	200	1000	930	800	705	630	2832	2550	2150	200	300	1335	6xØ29 (M24)	2757	N212A

NOTE: Pumps with flanges according to EN 1092-2 as standard.

Nscc200-300_4p50-en_d_td

Available ASME B16.5 version on request. For flanges dimensions see drawing.

LOWARA
a xylem brand

e-NSC SERIES
FORCES AND MOMENTS AT PUMP FLANGES

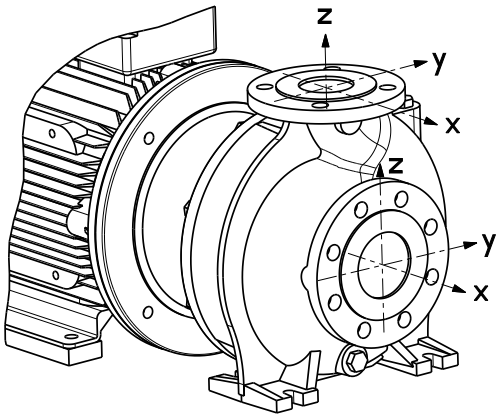

Forces at the pump flanges calculated according to EN ISO 5199:2002.

When the applied loads do not all attain the maximun values allowed, one of these loads may exceed the normal limit, provided tha the following supplementary conditions are satisfied:

- any component of a force or of a moment shall be limited to 1,4 times the maximum allowable value;

- the actual forces and moments acting on each flange are governed by the following formula:

$$\left(\frac{\sum|F_{x,y,z}|}{\sum|F_{max}|}\right)^2+\left(\frac{\sum|M_{x,y,z}|}{\sum|M_{max}|}\right)^2\leq 2$$

Cast iron casing
EN-GJL-250 / EN-GJS-400

Size	Suction									Discharge								
	DNS	Fx_{max} [N]	Fy_{max} [N]	Fz_{max} [N]	ΣF_{max} [N]	Mx_{max} [Nm]	My_{max} [Nm]	Mz_{max} [Nm]	ΣM_{max} [Nm]	DNS	Fx_{max} [N]	Fy_{max} [N]	Fz_{max} [N]	ΣF_{max} [N]	Mx_{max} [Nm]	My_{max} [Nm]	Mz_{max} [Nm]	ΣM_{max} [Nm]
32-…	50	580	530	480	925	490	350	405	730	32	320	300	370	575	385	265	300	560
40-…	65	740	650	600	1155	525	385	420	775	40	390	350	440	685	455	315	370	670
50-…	65	740	650	600	1155	525	385	420	775	50	530	480	580	925	490	350	405	730
65-…	80	880	790	720	1385	560	405	455	830	65	650	600	740	1155	525	385	420	775
80-…	100	1180	1050	950	1845	615	440	510	915	80	790	720	880	1385	560	405	455	830
100-…	125	1390	1250	1120	2180	735	525	665	1125	100	1050	950	1180	1845	615	440	510	915
125-…	150	1750	1580	1420	2755	875	615	720	1290	125	1250	1120	1390	2180	735	525	665	1125
150-…	200	2350	2100	1890	3675	1140	805	930	1680	150	1580	1420	1750	2755	875	615	720	1290
200-…	250	3340	2980	2700	5230	1780	1260	1460	2625	200	2100	1890	2350	3675	1140	805	930	1680
250-…	300	4000	3580	3220	6260	2420	1720	1980	3570	250	2980	2700	3340	5230	1780	1260	1460	2625
300-…	350	4660	4180	3760	7305	3100	2200	2540	4575	300	3580	3220	4000	6260	2420	1720	1980	3570

NSC_load-en_a_td

Stainless steel casing
(1.4408) - Duplex (1.4517)

Size	Suction									Discharge								
	DNS	Fx_{max} [N]	Fy_{max} [N]	Fz_{max} [N]	ΣF_{max} [N]	Mx_{max} [Nm]	My_{max} [Nm]	Mz_{max} [Nm]	ΣM_{max} [Nm]	DNS	Fx_{max} [N]	Fy_{max} [N]	Fz_{max} [N]	ΣF_{max} [N]	Mx_{max} [Nm]	My_{max} [Nm]	Mz_{max} [Nm]	ΣM_{max} [Nm]
50-315	65	1470	1300	1190	2295	1050	770	840	1550	50	1050	950	1160	1835	980	700	805	1450
65-…	80	1750	1580	1440	2765	1120	805	910	1655	65	1300	1190	1470	2295	1050	770	840	1550
80-…	100	2350	2100	1890	3675	1225	875	1015	1820	80	1580	1440	1750	2765	1120	805	910	1655
100-…	125	2770	2490	2240	4350	1470	1050	1330	2245	100	2100	1890	2350	3675	1230	880	1020	1830
125-…	150	3500	3150	2840	5500	1750	1225	1435	2575	125	2490	2240	2770	4350	1470	1050	1330	2245
150-…	200	4690	4200	3780	7345	2275	1610	1855	3350	150	3150	2840	3500	5500	1750	1225	1435	2575
200-…	250	5850	5220	4730	9160	3115	2205	2555	4595	200	4200	3780	4690	7345	2275	1610	1855	3350
250-…	300	7000	6270	5640	10965	4235	3010	3465	6250	250	5220	4730	5850	9160	3115	2205	2555	4595
300-…	350	8160	7320	6580	12790	5425	3850	4445	8005	300	6270	5640	7000	10965	4235	3010	3465	6250

NSC_load_ss-en_a_td

LOWARA
a xylem brand

NSC with VARIABLE FREQUENCY DRIVE

ECODESIGN DIRECTIVE (ErP)

The Ecodesign directive was put in place in 2011 and introduced minimum requirements for the efficiency of **AC motors and pumps**. Over the last few years, these requirements have been gradually intensified.

In 2014, with the standard EN 50598, there was a switch in the definition of efficiency class from an individual component approach towards an overall system one; which is the basic point for the "Extended product approach" (EPA).
Taking this concept further, the EN50598-2 introduced IES efficiency classes for frequency converters + motor systems (known as power drive systems-PDS) with power rating **from 0.12 kW to 1000kW and from 100V to 1000V**. For Power Drive System (PDS) the defined efficiency classes are IES0, IES1, IES2. If a PDS has 20% greater losses than the reference value of IES1 then it is classified as IES0; if it has 20% lower losses than the reference value of IES1 then it is classified as IES2.

- **With the HYDROVAR connected to a Lowara IE3 motor, the system achieves the highest IES class – IES2.**

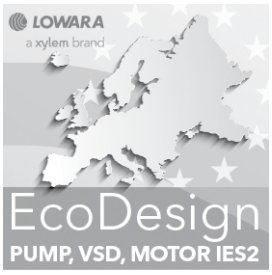

The e-NSC pump series is therefore already ready for the 2020 EU Ecodesign energy efficiency objectives.

LOWARA
a xylem brand

NSC..H
e-NSC WITH HYDROVAR

NSC..H SERIES
NSC WITH HYDROVAR

Background and context
For all pumping needs in commercial or residential building and in industry applications, the demand for intelligent pumping systems is constantly growing. Controlled systems offer many advantages: reduced operating costs for the lifetime of the pump, lower environmental impact, longer lifetime of piping systems and networks.

For this reason, Lowara has developed the NSC..H: an intelligent pumping system which assures high level performance with energy consumption tailored to the system's demand.

According to the EN 50598-2 standard the NSC..H is an IES2 power drive system, the highest efficiency class defined for this category.

Benefits of e-NSC with HYDROVAR

Saving: NSC..H transforms the NSC pumps into variable speed intelligent pumping systems. Thanks to the HYDROVAR, the speed of each pump varies so as to maintain a constant flow, a constant pressure, or a differential pressure. In doing so, at any point in time, the pump only receives the energy required. This in turns allows for considerable savings, especially for systems that have varying loads throughout the day.

Easy installation and space-saving: NSC..H saves time and space during installation. The Hydrovar is delivered already mounted on the motor (for models up to 22kW). The hydrovar is kept cool by the motor fan and does not require a control panel. In order to function, only fuses on the supply line are needed (Check your local electrical installation regulations).

Standard motors: NSC..H models are fitted with three-phase standard TEFC motors with insulation class 155 (F).

Identification code:
NSC..H models are identified by the letter "**H**" and the last two characters.
Examples:
NSCE**H**80-160/22/P45RCC4 **/2**
NSCE**H**50-250/22/P45RCS4 **/3**
NSCS**H**50-200/185/P25VCSZ **/4**

H = with integrated HYDROVAR
/2 = HYDROVAR HVL**2**.022 1~ 208-240 V (50/60 Hz)
/3 = HYDROVAR HVL**3**.022 3~ 208-240 V (50/60 Hz)
/4 = HYDROVAR HVL**4**.022 3~ 380-460 V (50/60 Hz)

Key Features of the HYDROVAR

- **No need for additional pressure sensors**:
  The NSC..H is fitted with a pressure transmitter or differential pressure transmitters, depending on the application.
- **No need for special pumps or motors**.
- **NSC..H is already pre-wired**.
- **No need for bypass or safety systems**:
  The NSC..H will immediately switch off when demand drops to zero or when it exceeds maximum pump capacity; thus making installation of additional safety devices unnecessary.
- **Anti-condensation device**:
  The HYDROVAR is fitted with anti-condensation devices which switch on when the pump is in standby in order to prevent condensation forming in the unit.

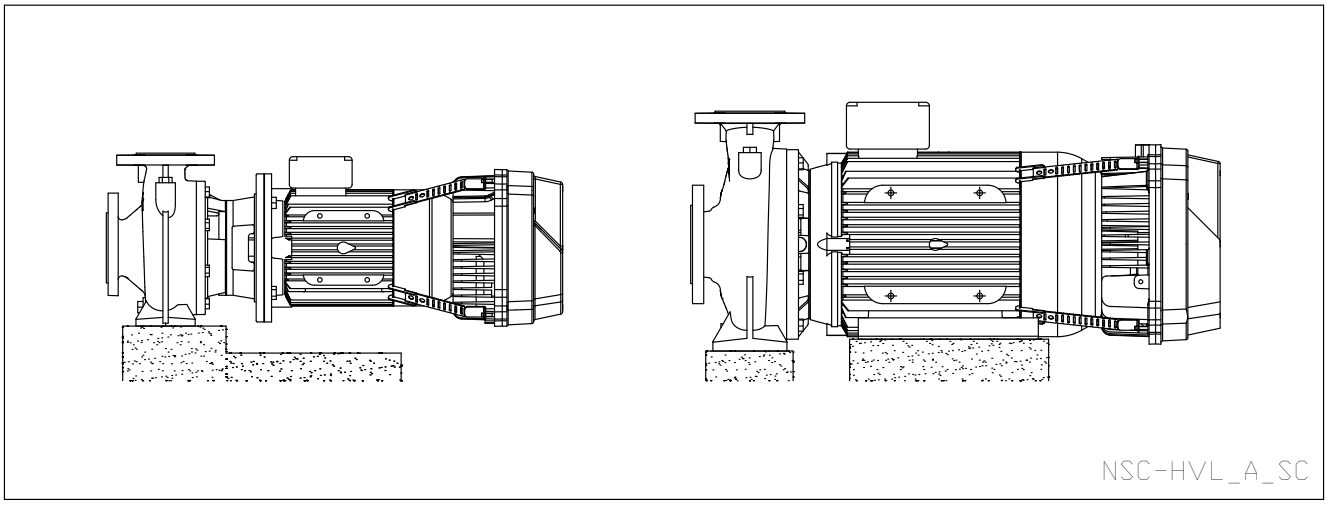

NSC..H SERIES
(e-NSC WITH HYDROVAR)

The basic function of the HYDROVAR device is to control the pump to meet the system demands.

HYDROVAR performs these functions by:

1) Measuring the system pressure or flow via a transmitter mounted on the pump's delivery side.
2) Calculating the motor speed to maintain the correct flow or pressure.
3) Sending out a signal to the pump to start the motor, increase speed, decrease speed or stop.
4) In the case of multiple pump installations, HYDROVAR will automatically provide for the cyclic changeover of the pumps' starting sequence.

In addition to these basic functions, HYDROVAR can perform controls only manageable by the most advanced computerized control systems. Some examples are:

- Stop the pump(s) at zero demand.
- Stop the pump(s) in case of water failure on the suction side (protection against dry running).
- Stop the pump if the required delivery exceeds the pump's capacity (protection against cavitation caused by excessive demand), or automatically switch on the next pump in a multiple series.
- Protect the pump and motor from over-voltage, under-voltage, overload, and earth fault.
- Vary the pump speed: acceleration and deceleration time.
- Compensate for increased flow resistance at high flow rates.
- Conduct automatic tests at set intervals.
- Monitor the converter and motor operating hours.
- Display the energy consumption (kWh).
- Display all functions on an LCD in different languages (Italian, English, French, German, Spanish, Portuguese, Dutch, etc...).
- Send a signal to a remote control system which is proportional to the pressure and frequency.
- Communicate with external control system via Modbus (RS 485 interface) and Bacnet as standard.

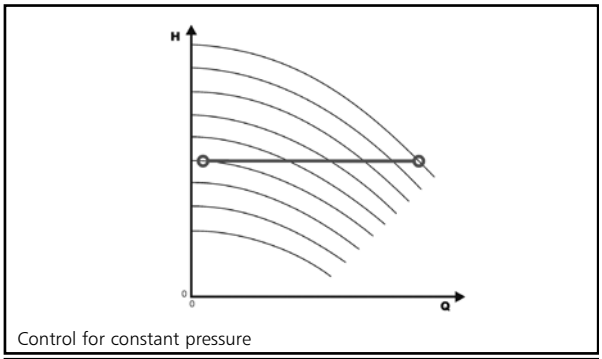

Control for constant pressure

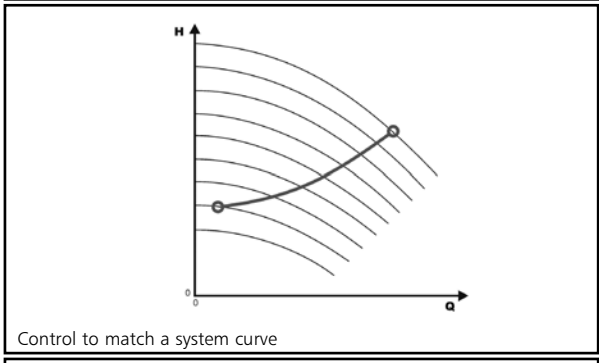

Control to match a system curve

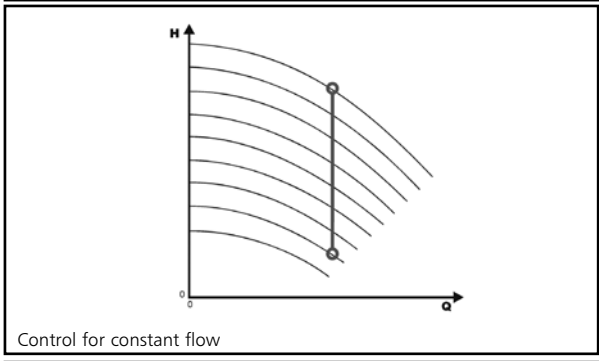

Control for constant flow

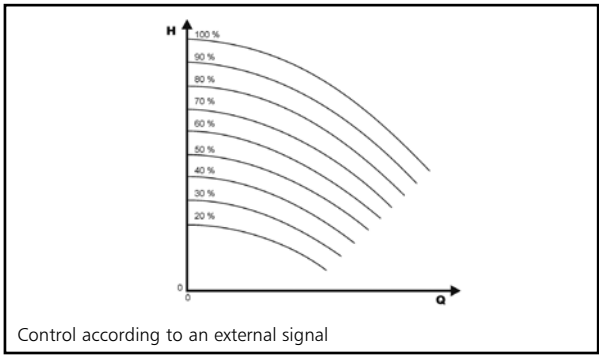

Control according to an external signal

LOWARA
a xylem brand

HYDROVAR HVL
IDENTIFICATION CODE

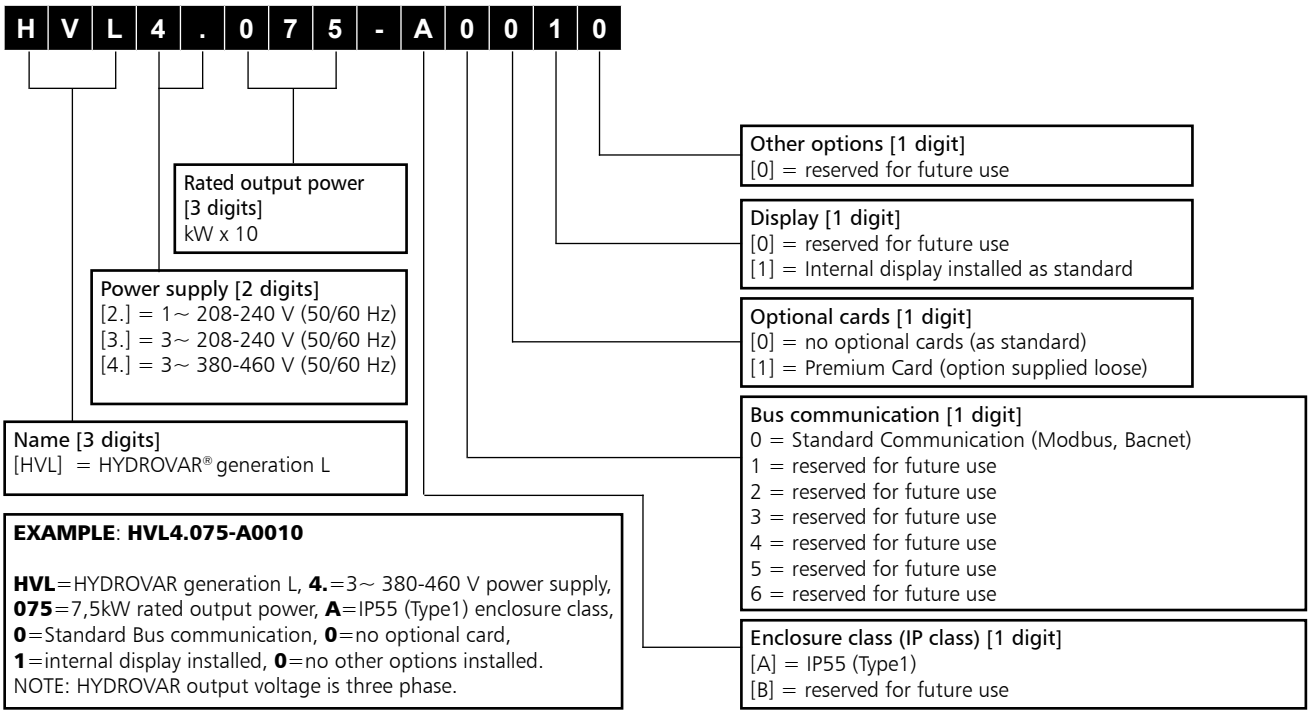

DIMENSIONS AND WEIGHTS

TYPE	MODELS			DIMENSIONS (mm)				WEIGHT
	/2	/3	/4	L	B	H	X	Kg
SIZE A	HVL2.015 ÷ 2.022	HVL3.015 ÷ 3.022	HVL4.015 ÷ 4.040	216	205	170	243	5,6
SIZE B	HVL2.030 ÷ 2.040	HVL3.030 ÷ 3.055	HVL4.055 ÷ 4.110	276	265	185	305	10,5
SIZE C	-	HVL3.075 ÷ 3.110	HVL4.150 ÷ 4.220	366	337	200	407	15,6

HVL_dim-en_b_td

HYDROVAR HVL
EMC COMPATIBILITY

EMC requirements

HYDROVAR fulfills the product standard EN61800-3:2004 + A1:2012, which defines categories (C1 to C4) for device application areas.
Depending on the motor cable length, a classification of HYDROVAR by category (based on EN61800-3) is reported in the following tables:

HVL	HYDROVAR classification by categories based on EN61800-3
2.015 ÷ 2.040	C1 (*)
3.015 ÷ 3.110	C2 (*)
4.015 ÷ 4.220	C2 (*)

(*) 0,75 motor cable length; contact Xylem for further information En-Rev_A

CARD

Premium Card HYDROVAR

For the NSC..H the Premium Card comes fitted as standard on the standalone HYDROVAR.
This allows to control up to five fix speed pumps via an external panel.
The Premium Card will allow additional features listed below:

- 2 additional Analog Inputs
- 2 Analog Outputs
- 1 additional digital input
- 5 relays.

OPTIONAL COMPONENTS

Sensors

The following sensors are available for HYDROVAR:

a. Pressure-transducer
b. Differential pressure-transducer
c. Temperature-sensor
d. Flow indicator (orifice plate, inductive flow meter)
e. Level-sensor.

HYDROVAR HVL (WALL MOUNTING KIT) DIMENSIONS AND WEIGHTS

As an option a HYDROVAR wall mounting kit is also available, this is used where mounting on the pump unit is impossible or where you would like the controls in another location, these are available for the new generation HYDROVAR HVL 2.015-4.220 (22 kW). The speed of the cooling fan modulates with the HYDROVAR usage which optimizes energy consumption and also reduces noise.

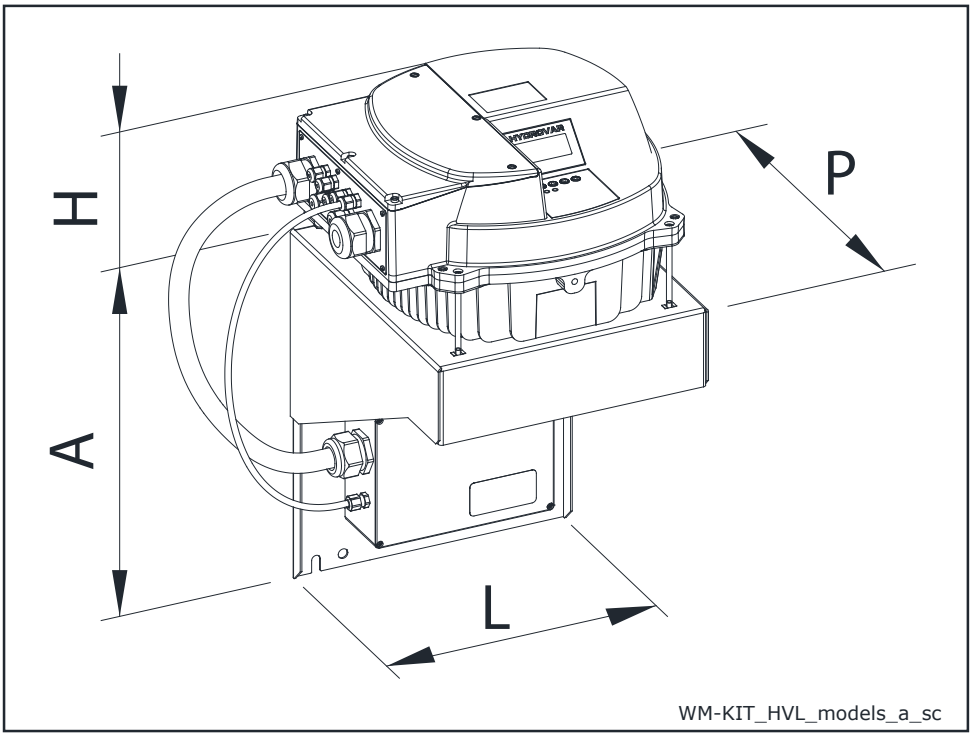

WM KIT TIPE	kW	WM KIT POWER SUPPLY	HVL SIZE	DIMENSIONS (mm)				WEIGHT (kg)	
				A	H	L	P	HVL	WM KIT
WM KIT HVL 2.015	1,5	1~ 230V	A	220	170	202	232	5,6	2,6
WM KIT HVL 2.022	2,2			220	170	202	232	5,6	2,6
WM KIT HVL 2.030	3		B	240	175	258	290	10,5	8,2
WM KIT HVL 2.040	4			320	175	288	305	10,5	5,4
WM KIT HVL 3.015	1,5	3~ 230V	A	220	170	202	232	5,6	2,6
WM KIT HVL 3.022	2,2			220	170	202	232	5,6	2,6
WM KIT HVL 3.030	3		B	240	175	258	290	10,5	8,2
WM KIT HVL 3.040	4			240	175	258	290	10,5	8,2
WM KIT HVL 3.055	5,5			240	175	258	290	10,5	8,2
WM KIT HVL 3.075	7,5		C	400	200	325	365	15,6	11,6
WM KIT HVL 3.110	11			400	200	325	365	15,6	11,6
WM KIT HVL 4.015	1,5	3~ 400V	A	240	170	258	290	5,6	8,2
WM KIT HVL 4.022	2,2			240	170	258	290	5,6	8,2
WM KIT HVL 4.030	3			240	170	258	290	5,6	8,2
WM KIT HVL 4.040	4			240	170	258	290	5,6	8,2
WM KIT HVL 4.055	5,5		B	240	175	258	290	10,5	8,2
WM KIT HVL 4.075	7,5			240	175	258	290	10,5	8,2
WM KIT HVL 4.110	11			320	175	288	305	10,5	5,4
WM KIT HVL 4.150	15		C	400	200	325	365	15,6	11,6
WM KIT HVL 4.185	18,5			400	200	325	365	15,6	11,6
WM KIT HVL 4.220	22			400	200	325	365	15,6	11,6

WM-KIT_HVL_models-EN_b_td

LOWARA
a xylem brand

ACCESSORIES

LOWARA
a xylem brand

FLEXIBLE COUPLING DIMENSIONS

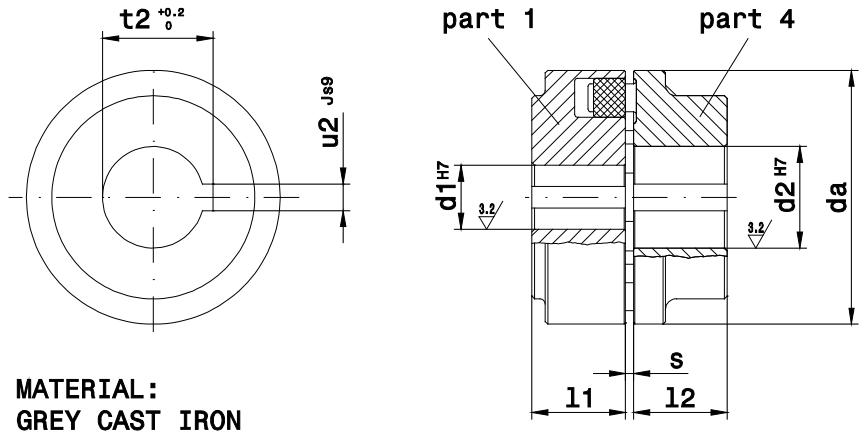

MATERIAL:
GREY CAST IRON
WITH FLEXIBLE ELEMENTS MADE
OF SYNTHETIC RUBBER 80 ShA

COUP-B_EN_A_DD

REF.	DENOMINATION	DIMENSIONS (mm)									
			PART 1 PUMP-SIDE HALF COUPLING					PART 4 MOTOR-SIDE HALF COUPLING			
	SIZE x d_1 x d_2	d_a	d_1^{H7}	l_1	u_1^{js9}	$t_1{}_0^{+0.2}$	s	d_2^{H7}	l_2	u_2^{js9}	$t_2{}_0^{+0.2}$
B68A	B 68 x 24 x 14	68	24	20	8	27,3	2÷4	14	20	5	16,3
B68B	B 68 x 24 x 19	68	24	20	8	27,3	2÷4	19	20	6	21,8
B68C	B 68 x 24 x 24	68	24	20	8	27,3	2÷4	24	20	8	27,3
B80A	B 80 x 24 x 28	80	24	30	8	27,3	2÷4	28	30	8	31,3
B95A	B 95 x 24 x 38	95	24	35	8	27,3	2÷4	38	35	10	41,3
B95B	B 95 x 24 x 42	95	24	35	8	27,3	2÷4	42	35	12	45,3
B95C	B 95 x 32 x 28	95	32	35	10	35,3	2÷4	28	35	8	31,3
B95D	B 95 x 32 x 38	95	32	35	10	35,3	2÷4	38	35	10	41,3
B95E	B 95 x 32 x 42	95	32	35	10	35,3	2÷4	42	35	12	45,3
B95F	B 95 x 42 x 42	95	42	35	12	45,3	2÷4	42	35	12	45,3
B110A	B 110 x 24 x 48	110	24	40	8	27,3	2÷4	48	40	14	51,8
B110B	B 110 x 32 x 48	110	32	40	10	35,3	2÷4	48	40	14	51,8
B110C	B 110 x 42 x 42	110	42	40	12	45,3	2÷4	42	40	12	45,3
B110D	B 110 x 42 x 48	110	42	40	12	45,3	2÷4	48	40	14	51,8
B110E	B 110 x 32 x 42	110	32	35	10	35,3	2÷4	42	35	12	45,3
B125A	B 125 x 32 x 48	125	32	50	10	35,3	2÷4	48	50	14	51,8
B125B	B 125 x 32 x 55	125	32	50	10	35,3	2÷4	55	50	16	59,3
B125C	B 125 x 42 x 55	125	42	50	12	45,3	2÷4	55	50	16	59,3
B125D	B 125 x 24 x 55	125	24	50	8	27,3	2÷4	55	50	16	59,3
B140A	B 140 x 32 x 60	140	32	55	10	35,3	2÷4	60	55	18	64,4
B140B	B 140 x 42 x 60	140	42	55	12	45,3	2÷4	60	55	18	64,4
B140C	B 140 x 60 x 55	140	60	70	18	64,4	2÷4	55	50	16	59,3
B140D	B 140 x 60 x 60	140	60	70	18	64,4	2÷4	60	55	18	64,4
B160A	B 160 x 32 x 65	160	32	60	10	35,3	2÷6	65	60	18	69,4
B160B	B 160 x 42 x 65	160	42	60	12	45,3	2÷6	65	60	18	69,4
B160C	B 160 x 60 x 65	160	60	60	18	64,4	2÷6	65	60	18	69,4
B180A	B 180 x 42 x 65	180	42	70	12	45,3	2÷6	65	60	18	69,4
B180B	B 180 x 42 x 75	180	42	70	12	45,3	2÷6	75	70	20	79,9
B180C	B 180 x 60 x 75	180	60	70	18	64,4	2÷6	75	70	20	79,9
B200A	B 200 x 60 x 80	200	60	80	18	64,4	2÷6	80	80	22	85,4
B225A	B 225 x 60 x 80	225	60	90	18	64,4	2÷6	80	90	22	85,4
B250A	B 250 x 60 x 100	250	60	100	18	64,4	3÷8	100	100	28	106,4

Coup-b-en_c_td

LOWARA
a xylem brand

SPACER COUPLING DIMENSIONS

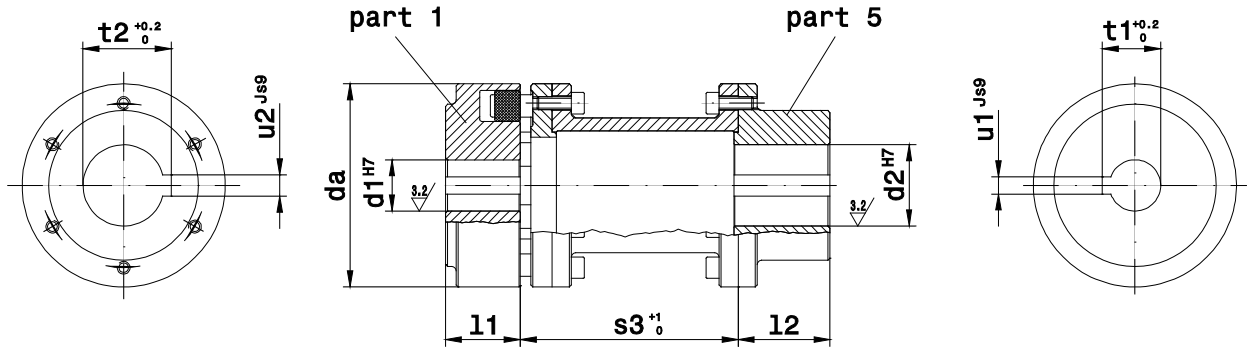

MATERIAL:
GREY CAST IRON
WITH FLEXIBLE ELEMENTS MADE
OF SYNTHETIC RUBBER 80 ShA

COUP-H_EN_A_DD

REF.	DENOMINATION	DIMENSIONS (mm)									
				PART 1 PUMP-SIDE HALF COUPLING				PART 5 MOTOR-SIDE HALF COUPLING			
	SIZE x l x d_1 x d_2	da	s_3 0 +1	d_1 H7	l_1	u_1 js9	t_1 0 +0.2	d_2 H7	l_2	u_2 js9	t_2 0 +0.2
H80A	H 80-100 x 24 x 19	80	100	24	30	8	27,3	19	45	6	21,8
H80B	H 80-100 x 24 x 24	80	100	24	30	8	27,3	24	45	8	27,3
H80C	H 80-100 x 24 x 28	80	100	24	30	8	27,3	28	45	8	31,3
H80D	H 80-100 x 24 x 14	80	100	24	30	8	27,3	14	45	5	16,3
H80E	H 80-140 x 24 x 24	80	140	24	30	8	27,3	24	45	8	27,3
H80F	H 80-140 x 24 x 28	80	140	24	30	8	27,3	28	45	8	31,3
H80G	H 80-140 x 32 x 28	80	140	32	30	10	35,3	28	45	8	31,3
H95A	H 95-100 x 24 x 38	95	100	24	35	8	27,3	38	45	10	41,3
H95B	H 95-100 x 24 x 42	95	100	24	35	8	27,3	42	45	12	45,3
H95C	H 95-140 x 32 x 28	95	140	32	35	10	35,3	28	45	8	31,3
H95D	H 95-140 x 32 x 38	95	140	32	35	10	35,3	38	45	10	41,3
H95E	H 95-140 x 32 x 42	95	140	32	35	10	35,3	42	45	12	45,3
H95F	H 95-140 x 42 x 42	95	140	42	35	12	45,3	42	45	12	45,3
H95G	H 95-140 x 24 x 42	95	140	24	35	8	27,3	42	45	12	45,3
H95H	H 95-140 x 24 x 38	95	140	24	35	8	27,3	38	45	10	41,3
H110A	H 110-100 x 24 x 48	110	100	24	40	8	27,3	48	50	14	51,8
H110B	H 110-140 x 32 x 48	110	140	32	40	10	35,3	48	50	14	51,8
H110C	H 110-140 x 42 x 48	110	140	42	40	12	45,3	48	50	14	51,8
H110D	H 110-140 x 24 x 48	110	140	24	40	8	27,3	48	50	14	51,8
H110E	H 110-140 x 32 x 42	110	140	32	40	10	35,3	42	45	12	45,3
H110F	H 110-140 x 42 x 42	110	140	42	40	12	45,3	42	45	12	45,3
H125A	H 125-100 x 24 x 55	125	100	24	50	8	27,3	55	50	16	59,3
H125B	H 125-140 x 32 x 48	125	140	32	50	10	35,3	48	50	14	51,8
H125C	H 125-140 x 32 x 55	125	140	32	50	10	35,3	55	50	16	59,3
H125D	H 125-140 x 42 x 55	125	140	42	50	12	45,3	55	50	16	59,3
H125E	H 125-200 x 42 x 48	125	200	42	50	12	45,3	48	70	14	51,8
H125F	H 125-200 x 42 x 55	125	200	42	50	12	45,3	55	70	16	59,3
H125G	H 125-140 x 24 x 55	125	140	24	50	8	27,3	55	50	16	59,3
H125H	H 125-200 x 42 x 42	125	200	42	50	12	45,3	42	45	12	45,3
H140A	H 140-140 x 32 x 60	140	140	32	55	10	35,3	60	65	18	64,4
H140B	H 140-140 x 42 x 60	140	140	42	55	12	45,3	60	65	18	64,4
H140C	H 140-200 x 42 x 60	140	200	42	55	12	45,3	60	65	18	64,4
H140D	H 140-250 x 60 x 60	140	250	60	60	18	64,4	60	65	18	64,4
H160A	H 160-140 x 32 x 65	160	140	32	60	10	35,3	65	70	18	69,4
H160B	H 160-140 x 42 x 65	160	140	42	60	12	45,3	65	70	18	69,4
H160C	H 160-200 x 42 x 65	160	200	42	60	12	45,3	65	70	18	69,4
H160D	H 160-250 x 60 x 65	160	250	60	60	18	64,4	65	80	18	69,4
H180A	H 180-140 x 42 x 65	180	140	42	70	12	45,3	65	80	18	69,4
H180B	H 180-140 x 42 x 75	180	140	42	70	12	45,3	75	80	20	79,9
H180C	H 180-200 x 42 x 75	180	200	42	70	12	45,3	75	80	20	79,9
H180D	H 180-250 x 60 x 75	180	250	60	70	18	64,4	75	80	20	79,9
H200A	H 200-250 x 60 x 80	200	250	60	80	18	64,4	80	90	22	85,4
H225A	H 225-250 x 60 x 80	225	250	60	90	18	64,4	80	100	22	85,4
H250A	H 250-250 x 60 x 100	250	250	60	100	18	64,4	100	110	28	106,4

Coup-h_en_d_td

LOWARA
a xylem brand

SPACER COUPLING DIMENSIONS

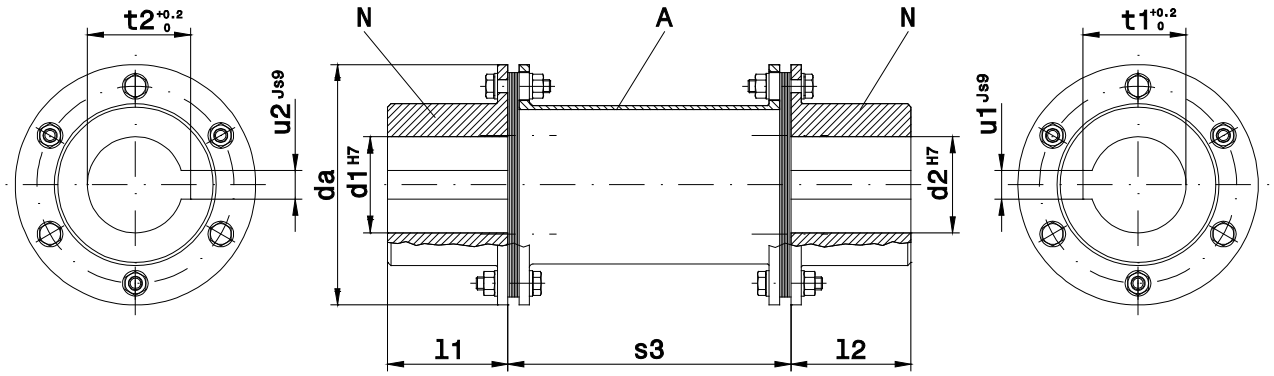

MATERIAL:
HUB AND SPACER: CARBON STEEL (1.0570)
PLATE PACK: CrNi SPRING STEEL
BOLTS AND NUTS: 10.9 / 10.

COUP-NAN_EN_A_DD

REF.	DENOMINATION	DIMENSIONS (mm)									
				N				N			
				PUMP-SIDE HALF COUPLING				MOTOR-SIDE HALF COUPLING			
	SIZE x l x d_1 x d_2	da	s_3	d_1^{H7}	l_1	u_1^{js9}	$t_1{}_0^{+0.2}$	d_2^{H7}	l_2	u_2^{js9}	$t_2{}_0^{+0.2}$
N135A	NAN 135-6 x 300 x 60 x 55	135	300	60	65	18	64,4	55	65	16	59,3
N135B	NAN 135-6 x 300 x 60 x 60	135	300	60	65	18	64,4	60	65	18	64,4
N135C	NAN 135-6 x 300 x 60 x 65	135	300	60	65	18	64,4	65	65	18	69,4
N150A	NAN 150-6 x 300 x 60 x 75	150	300	60	75	18	64,4	75	75	20	79,9
N176A	NAN 176-6 x 300 x 60 x 80	176	300	60	85	18	64,4	80	85	22	85,4
N185A	NAN 185-6 x 300 x 60 x 80	185	300	60	90	18	64,4	80	90	22	85,4
N212A	NAN 212-6 x 300 x 60 x 100	212	300	60	100	18	64,4	100	100	28	106,4

Coup-nan-en_b_td

e-NSC SERIES (DIMENSIONS OF ROUND THREADED COUNTERFLANGES ACCORDING TO EN 1092-1)

	DIMENSIONS (mm)					HOLES		
DN	ø C	ø A	B	ø D	H	ø F	N°	PN
32	Rp 1¼	100	13	140	16	18	4	16
40	Rp 1½	110	14	150	19	18	4	16
50	Rp 2	125	16	165	24	18	4	16
65	Rp 2½	145	16	185	23	18	4	16
80	Rp 3	160	17	200	27	18	8	16
100	Rp 4	180	18	220	31	18	8	16

Nsc-ctf-tonde-f-en_a_td

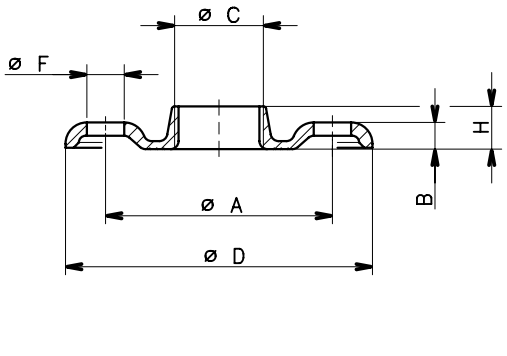

e-NSC SERIES (DIMENSIONS OF ROUND WELD COUNTERFLANGES ACCORDING TO EN 1092-1)

	DIMENSIONS (mm)				HOLES		
DN	ø C	ø A	B	ø D	ø F	N°	PN
65	77,5	145	20	185	18	4	16
80	90,5	160	20	200	18	8	16
100	116	180	22	220	18	8	16
125	141,5	210	22	250	18	8	16
150	170,5	240	24	285	22	8	16
200	221,5	295	24	340	22	12	16
250	276,5	355	26	405	26	12	16
300	327,5	410	28	460	26	12	16
350	359,5	470	30	520	26	16	16

Nsc-ctf-tonde-s-en_b_td

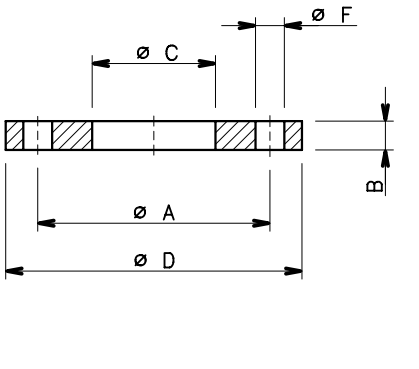

LOWARA
a xylem brand

NSCE 32 ÷ 80 SERIES, 2 POLES
SHIM FOR PUMP AND MOTOR FEET

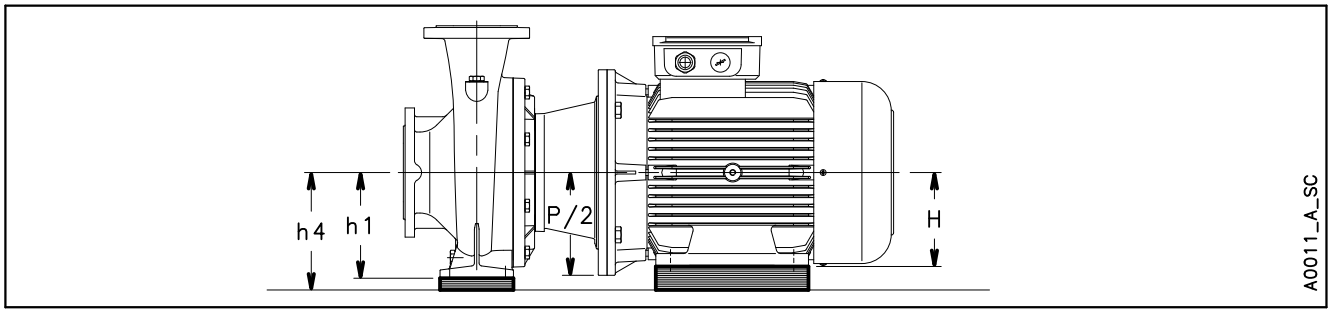

PUMP TYPE	DIMENSIONS (mm)				SHIM*	
NSCE..2	PUMP	MOTOR			CODE	
	h1	P/2	H	h4	Pump	Motor
32-125/11/S	112	-	-	112	-	-
32-125/15/S	112	-	-	112	-	-
32-125/22/P	112	-	-	112	-	-
32-125/30/P	112	-	-	112	-	-
32-160/22/P	132	-	-	132	-	-
32-160/30/P	132	-	-	132	-	-
32-160/40/P	132	-	-	132	-	-
32-160/55/P	132	-	-	132	-	-
32-200/30/P	160	-	-	160	-	-
32-200/40/P	160	-	-	160	-	-
32-200/55/P	160	-	-	160	-	-
32-200/75/P	160	-	-	160	-	-
32-250/75/P	180	-	-	180	-	-
32-250/92/P	180	-	-	180	-	-
32-250/110/P	180	-	-	180	-	-
32-250/150/P	180	-	160	180	-	2 x 161407670
40-125/15/S	112	-	-	112	-	-
40-125/22/P	112	-	-	112	-	-
40-125/30/P	112	-	-	112	-	-
40-125/40/P	112	-	-	112	-	-
40-160/30/P	132	-	-	132	-	-
40-160/40/P	132	-	-	132	-	-
40-160/55/P	132	-	-	132	-	-
40-160/75/P	132	-	-	132	-	-
40-200/55/P	160	-	-	160	-	-
40-200/75/P	160	-	-	160	-	-
40-200/92/P	160	-	-	160	-	-
40-200/110/P	160	-	-	160	-	-
40-250/92/P	180	-	-	180	-	-
40-250/110/P	180	-	-	180	-	-
40-250/150/P	180	-	160	180	-	2 x 161407670
40-250/185/P	180	-	160	180	-	2 x 161407670
40-250/220/P	180	-	160	180	-	2 x 161407670
50-125/30/P	132	-	-	132	-	-
50-125/40/P	132	-	-	132	-	-
50-125/55/P	132	-	-	132	-	-
50-125/75/P	132	-	-	132	-	-
50-160/55/P	160	-	-	160	-	-
50-160/75/P	160	-	-	160	-	-
50-160/92/P	160	-	-	160	-	-
50-160/110/P	160	-	-	160	-	-

PUMP TYPE	DIMENSIONS (mm)				SHIM*	
NSCE..2	PUMP	MOTOR			CODE	
	h1	P/2	H	h4	Pump	Motor
50-200/92/P	160	-	-	160	-	-
50-200/110/P	160	-	-	160	-	-
50-200/150/P	160	-	160	160	-	-
50-200/185/P	160	-	160	160	-	-
50-250/150/P	180	-	160	180	-	2 x 161407670
50-250/185/P	180	-	160	180	-	2 x 161407670
50-250/220/P	180	-	160	180	-	2 x 161407670
65-125/40/P	160	-	-	160	-	-
65-125/55/P	160	-	-	160	-	-
65-125/75/P	160	-	-	160	-	-
65-125/92/P	160	-	-	160	-	-
65-125/110/P	160	-	-	160	-	-
65-160/75/P	160	-	-	160	-	-
65-160/92/P	160	-	-	160	-	-
65-160/110/P	160	-	-	160	-	-
65-160/150/P	160	-	160	160	-	-
65-160/185/P	160	-	160	160	-	-
65-200/110/P	180	-	-	180	-	-
65-200/150/P	180	-	160	180	-	2 x 161407670
65-200/185/P	180	-	160	180	-	2 x 161407670
65-200/220/P	180	-	160	180	-	2 x 161407670
80-160/110/P	180	-	-	180	-	-
80-160/150/P	180	-	160	180	-	2 x 161407670
80-160/185/P	180	-	160	180	-	2 x 161407670
80-160/220/P	180	-	160	180	-	2 x 161407670

* On request.

LOWARA
a xylem brand

NSCE 32 ÷ 80 SERIES, 4 POLES
SHIM FOR PUMP AND MOTOR FEET

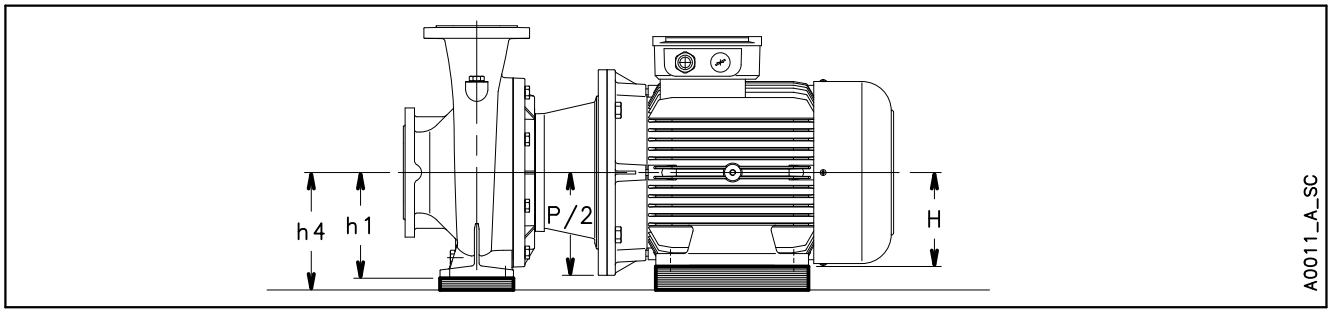

PUMP TYPE NSCE..4	DIMENSIONS (mm)				SHIM* CODE	
	PUMP	MOTOR				
	h1	P/2	H	h4	Pump	Motor
32-125/02B/S	112	-	-	112	-	-
32-125/02A/S	112	-	-	112	-	-
32-125/02/S	112	-	-	112	-	-
32-125/03/S	112	-	-	112	-	-
32-160/02/S	132	-	-	132	-	-
32-160/03/S	132	-	-	132	-	-
32-160/05A/S	132	-	-	132	-	-
32-160/05/S	132	-	-	132	-	-
32-200/05A/S	160	-	-	160	-	-
32-200/05/S	160	-	-	160	-	-
32-200/07/X	160	-	-	160	-	-
32-200/11/P	160	-	-	160	-	-
32-250/15B/P	180	-	-	180	-	-
32-250/15A/P	180	-	-	180	-	-
32-250/15/P	180	-	-	180	-	-
32-250/22/P	180	-	-	180	-	-
40-125/02A/S	112	-	-	112	-	-
40-125/02/S	112	-	-	112	-	-
40-125/03/S	112	-	-	112	-	-
40-125/05/S	112	-	-	112	-	-
40-160/03/S	132	-	-	132	-	-
40-160/05/S	132	-	-	132	-	-
40-160/07/X	132	-	-	132	-	-
40-160/11/P	132	-	-	132	-	-
40-200/07/X	160	-	-	160	-	-
40-200/11/P	160	-	-	160	-	-
40-200/15A/P	160	-	-	160	-	-
40-200/15/P	160	-	-	160	-	-
40-250/15A/P	180	-	-	180	-	-
40-250/15/P	180	-	-	180	-	-
40-250/22A/P	180	-	-	180	-	-
40-250/22/P	180	-	-	180	-	-
40-250/30/P	180	-	-	180	-	-
50-125/03/S	132	-	-	132	-	-
50-125/05/S	132	-	-	132	-	-
50-125/07/X	132	-	-	132	-	-
50-125/11/P	132	-	-	132	-	-
50-160/07/X	160	-	-	160	-	-
50-160/11A/P	160	-	-	160	-	-
50-160/11/P	160	-	-	160	-	-
50-160/15/P	160	-	-	160	-	-

PUMP TYPE NSCE..4	DIMENSIONS (mm)				SHIM* CODE	
	PUMP	MOTOR				
	h1	P/2	H	h4	Pump	Motor
50-200/15A/P	160	-	-	160	-	-
50-200/15/P	160	-	-	160	-	-
50-200/22A/P	160	-	-	160	-	-
50-200/22/P	160	-	-	160	-	-
50-250/22A/P	180	-	-	180	-	-
50-250/22/P	180	-	-	180	-	-
50-250/30/P	180	-	-	180	-	-
50-250/40/P	180	-	-	180	-	-
65-125/05/S	160	-	-	160	-	-
65-125/07/X	160	-	-	160	-	-
65-125/11/P	160	-	-	160	-	-
65-125/15/P	160	-	-	160	-	-
65-160/15B/P	160	-	-	160	-	-
65-160/15A/P	160	-	-	160	-	-
65-160/15/P	160	-	-	160	-	-
65-160/22A/P	160	-	-	160	-	-
65-160/22/P	160	-	-	160	-	-
65-200/15/P	180	-	-	180	-	-
65-200/22A/P	180	-	-	180	-	-
65-200/22/P	180	-	-	180	-	-
65-200/30/P	180	-	-	180	-	-
65-200/40/P	180	-	-	180	-	-
80-160/15/P	180	-	-	180	-	-
80-160/22A/P	180	-	-	180	-	-
80-160/22/P	180	-	-	180	-	-
80-160/30/P	180	-	-	180	-	-

* On request.

nsce-32-80sp_4p50-en_b_td

LOWARA
a xylem brand

NSCS 32 ÷ 80 SERIES, 2 POLES
SHIM FOR PUMP AND MOTOR FEET

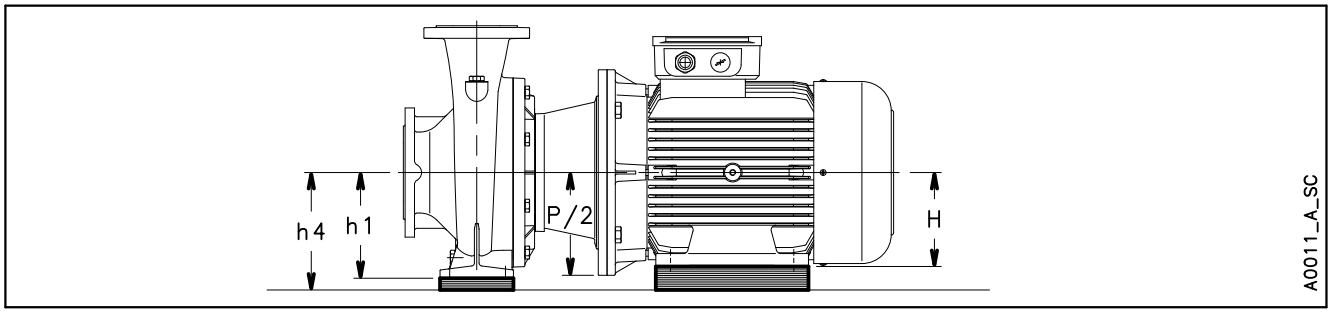

PUMP TYPE NSCS..2	DIMENSIONS (mm) PUMP h1	MOTOR P/2	MOTOR H	MOTOR h4	SHIM* CODE Pump	SHIM* CODE Motor
32-125/11/S	112	100	-	112	-	-
32-125/15/S	112	100	-	112	-	-
32-125/22/P	112	100	-	112	-	-
32-125/30/P	112	125	-	132	2 x 161403210	-
32-160/22/P	132	100	-	100	-	-
32-160/30/P	132	125	-	125	-	-
32-160/40/P	132	125	-	125	-	-
32-160/55/P	132	150	-	160	2 x 161403210 2 x 161407550	-
32-200/30/P	160	125	-	160	-	-
32-200/40/P	160	125	-	160	-	-
32-200/55/P	160	150	-	160	-	-
32-200/75/P	160	150	-	160	-	-
32-250/75/P	180	150	-	180	-	-
32-250/110A/P	180	175	160	180	-	2 x 161407670
32-250/110/P	180	175	160	180	-	2 x 161407670
32-250/150/P	180	175	160	180	-	2 x 161407670
40-125/15/S	112	100	-	112	-	-
40-125/22/P	112	100	-	112	-	-
40-125/30/P	112	125	-	132	2 x 161403210	-
40-125/40/P	112	125	-	132	2 x 161403210	-
40-160/30/P	132	125	-	132	-	-
40-160/40/P	132	125	-	132	-	-
40-160/55/P	132	150	-	160	2 x 161403210 2 x 161407550	-
40-160/75/P	132	150	-	160	2 x 161403210 2 x 161407550	-
40-200/55/P	160	150	-	160	-	-
40-200/75/P	160	150	-	160	-	-
40-200/110A/P	160	175	160	180	2 x 161403210	2 x 161407670
40-200/110/P	160	175	160	180	2 x 161403210	2 x 161407670
40-250/110A/P	180	175	160	180	-	2 x 161407670
40-250/110/P	180	175	160	180	-	2 x 161407670
40-250/150/P	180	175	160	180	-	2 x 161407670
40-250/185/P	180	175	160	180	-	2 x 161407670
40-250/220/P	180	175	160	180	-	2 x 161407670
50-125/30/P	132	125	-	132	-	-
50-125/40/P	132	125	-	132	-	-
50-125/55/P	132	150	-	160	2 x 161403210 2 x 161407550	-
50-125/75/P	132	150	-	160	2 x 161403210 2 x 161407550	-
50-160/55/P	160	150	-	160	-	-
50-160/75/P	160	150	-	160	-	-
50-160/110A/P	160	175	160	180	2 x 161403210	2 x 161407670
50-160/110/P	160	175	160	180	2 x 161403210	2 x 161407670
50-200/110A/P	160	175	160	180	2 x 161403210	2 x 161407670
50-200/110/P	160	175	160	180	2 x 161403210	2 x 161407670
50-200/150/P	160	175	160	180	2 x 161403210	2 x 161407670
50-200/185/P	160	175	160	180	2 x 161403210	2 x 161407670

PUMP TYPE NSCS..2	DIMENSIONS (mm) PUMP h1	MOTOR P/2	MOTOR H	MOTOR h4	SHIM* CODE Pump	SHIM* CODE Motor
50-250/150/P	180	175	160	180	-	2 x 161407670
50-250/185/P	180	175	160	180	-	2 x 161407670
50-250/220/P	180	175	160	180	-	2 x 161407670
50-250/300/W	180	200	200	200	2 x 161403230	-
50-315/370/W	225	200	200	225	-	2 x 768082110
50-315/450/W	225	225	225	225	-	-
50-315/550/W	225	275	250	280	2 x 768003140 2 x 768003180	2 x 161407990
50-315/750/W	225	275	280	280	2 x 768003140 2 x 768003180	-
65-125/40/P	160	125	-	160	-	-
65-125/55/P	160	150	-	160	-	-
65-125/75/P	160	150	-	160	-	-
65-125/110A/P	160	175	160	180	2 x 161403230	2 x 161407670
65-125/110/P	160	175	160	180	2 x 161403230	2 x 161407670
65-160/75/P	160	150	-	160	-	-
65-160/110A/P	160	175	160	180	2 x 161403230	2 x 161407670
65-160/110/P	160	175	160	180	2 x 161403230	2 x 161407670
65-160/150/P	160	175	160	180	2 x 161403230	2 x 161407670
65-160/185/P	160	175	160	180	2 x 161403230	2 x 161407670
65-200/110/P	180	175	160	180	-	2 x 161407670
65-200/150/P	180	175	160	180	-	2 x 161407670
65-200/185/P	180	175	160	180	-	2 x 161407670
65-200/220/P	180	175	160	180	-	2 x 161407670
65-200/300/W	180	200	200	200	2 x 161403230	-
65-250/220/P	200	175	160	200	-	4 x 161407670
65-250/300/W	200	200	200	200	-	-
65-250/370/W	200	200	200	200	-	-
65-250/450/W	200	225	225	225	2 x 161404380	-
65-250/550/W	200	275	250	280	4 x 161404380 2 x 161407800	2 x 161407990
65-315/550/W	225	275	250	280	2 x 768003140 2 x 768003180	2 x 161407990
65-315/750/W	225	275	280	280	2 x 768003140 2 x 768003180	-
65-315/900/W	225	275	280	280	2 x 768003140 2 x 768003180	-
80-160/110/P	180	175	160	180	-	2 x 161407670
80-160/150/P	180	175	160	180	-	2 x 161407670
80-160/185/P	180	175	160	180	-	2 x 161407670
80-160/220/P	180	175	160	180	-	2 x 161407670
80-200/220/P	180	175	160	180	-	2 x 161407670
80-200/300/W	180	200	200	200	2 x 161403230	-
80-200/370/W	180	200	200	200	2 x 161403230	-
80-200/450/W	180	225	225	225	2 x 161403230 2 x 161407570	-
80-250/370/W	200	200	200	200	-	-
80-250/450/W	200	225	225	225	2 x 161404380	-
80-250/550/W	200	275	250	280	4 x 161404380 2 x 161407800	2 x 161407990
80-250/750/W	200	275	280	280	4 x 161404380 2 x 161407800	-

* On request.

nscs-32-80sp_2p50-en_b_td

LOWARA
a xylem brand

NSCS 100 ÷ 125 SERIES, 2 POLES
SHIM FOR PUMP AND MOTOR FEET

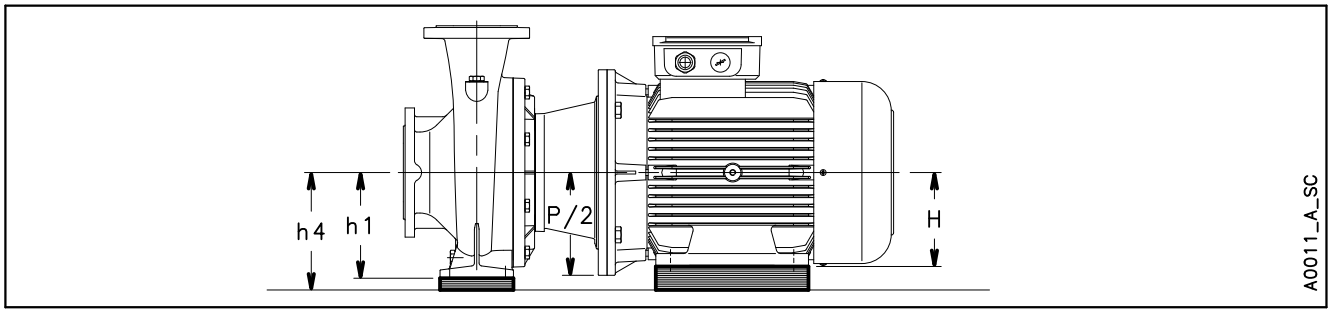

PUMP TYPE NSCS..2	DIMENSIONS (mm)				SHIM* CODE	
	PUMP	MOTOR				
	h1	P/2	H	h4	Pump	Motor
100-160/150/P	200	175	160	200	-	4 x 161407670
100-160/185/P	200	175	160	200	-	4 x 161407670
100-160/220/P	200	175	160	200	-	4 x 161407670
100-160/300/W	200	200	200	200	-	-
100-200/300/W	200	200	200	200	-	-
100-200/370/W	200	200	200	200	-	-
100-200/450/W	200	225	225	225	2 x 161404380	-
100-200/550/W	200	275	250	280	2 x 768003170 2 x 768003190	2 x 161407990
100-250/750/W	225	275	280	280	2 x 768003140 2 x 768003180	-
100-250/900/W	225	275	280	280	2 x 768003140 2 x 768003180	-
125-200/450/W	250	225	225	250	-	2 x 768082120
125-200/550/W	250	275	250	280	2 x 768003170	2 x 161407990
125-200/750/W	250	275	280	280	2 x 768003170	-
125-200/900/W	250	275	280	280	2 x 768003170	-

PUMP TYPE NSCS..2	DIMENSIONS (mm)				SHIM* CODE	
	PUMP	MOTOR				
	h1	P/2	H	h4	Pump	Motor

* On request.

LOWARA
a xylem brand

NSCS 32 ÷ 80 SERIES, 4 POLES
SHIM FOR PUMP AND MOTOR FEET

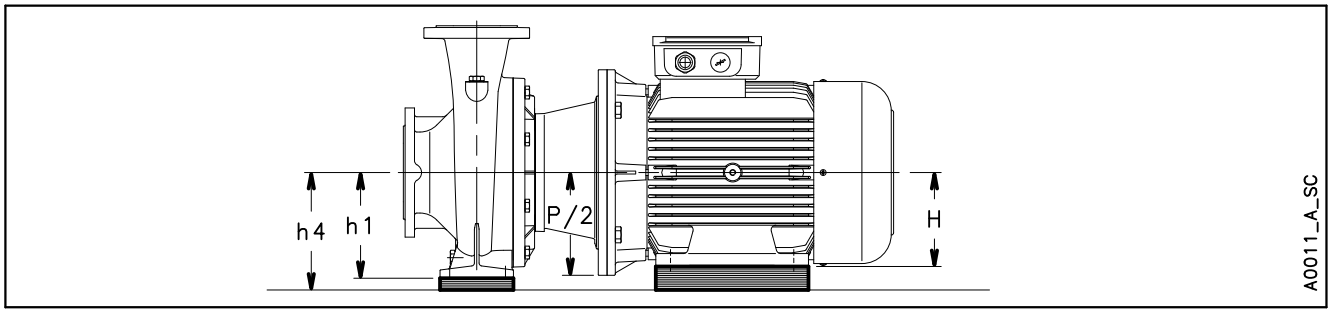

PUMP TYPE	DIMENSIONS (mm)				SHIM*	
NSCS..4	PUMP	MOTOR			CODE	
	h1	P/2	H	h4	Pump	Motor
32-160/05A/S	132	100	-	132	-	-
32-160/05/S	132	100	-	132	-	-
32-200/05A/S	160	100	-	160	-	-
32-200/05/S	160	100	-	160	-	-
32-200/07/X	160	100	-	160	-	-
32-200/11/P	160	100	-	160	-	-
32-250/11A/P	180	100	-	180	-	-
32-250/11/P	180	100	-	180	-	-
32-250/15/P	180	100	-	180	-	-
32-250/22/P	180	125	-	180	-	-
40-125/05/S	112	100	-	112	-	-
40-160/03/S	132	100	-	132	-	-
40-160/05/S	132	100	-	132	-	-
40-160/07/X	132	100	-	132	-	-
40-160/11/P	132	100	-	132	-	-
40-200/07/X	160	100	-	160	-	-
40-200/11/P	160	100	-	160	-	-
40-200/15A/P	160	100	-	160	-	-
40-200/15/P	160	100	-	160	-	-
40-250/11/P	180	100	-	180	-	-
40-250/15/P	180	100	-	180	-	-
40-250/22A/P	180	125	-	180	-	-
40-250/22/P	180	125	-	180	-	-
40-250/30/P	180	125	-	180	-	-
50-125/05/S	132	100	-	132	-	-
50-125/07/X	132	100	-	132	-	-
50-125/11/P	132	100	-	132	-	-
50-160/07/X	132	100	-	132	-	-
50-160/11A/P	160	100	-	160	-	-
50-160/11/P	160	100	-	160	-	-
50-160/15/P	160	100	-	160	-	-
50-200/11/P	160	100	-	160	-	-
50-200/15/P	160	100	-	160	-	-
50-200/22A/P	160	125	-	160	-	-
50-200/22/P	160	125	-	160	-	-
50-250/22A/P	180	125	-	180	-	-
50-250/22/P	180	125	-	180	-	-
50-250/30/P	180	125	-	180	-	-
50-250/40/P	180	125	-	180	-	-
50-315/40/P	225	125	-	225	-	-
50-315/55/P	225	150	-	225	-	-
50-315/75/P	225	150	-	225	-	-
50-315/110/P	225	175	160	225	-	1 x 743760350▲

PUMP TYPE	DIMENSIONS (mm)				SHIM*	
NSCS..4	PUMP	MOTOR			CODE	
	h1	P/2	H	h4	Pump	Motor
65-125/05/S	160	100	-	160	-	-
65-125/07/X	160	100	-	160	-	-
65-125/11/P	160	100	-	160	-	-
65-125/15/P	160	100	-	160	-	-
65-160/11A/P	160	100	-	160	-	-
65-160/11/P	160	100	-	160	-	-
65-160/15/P	160	100	-	160	-	-
65-160/22A/P	160	125	-	160	-	-
65-160/22/P	160	125	-	160	-	-
65-200/15/P	180	100	-	180	-	-
65-200/22A/P	180	125	-	180	-	-
65-200/22/P	180	125	-	180	-	-
65-200/30/P	180	125	-	180	-	-
65-200/40/P	180	125	-	180	-	-
65-250/30/P	200	125	-	200	-	-
65-250/40/P	200	125	-	200	-	-
65-250/55A/P	200	150	-	200	-	-
65-250/55/P	200	150	-	200	-	-
65-250/75/P	200	150	-	200	-	-
65-315/55/P	225	150	-	225	-	-
65-315/75/P	225	150	-	225	-	-
65-315/110/P	225	175	160	225	-	1 x 743760350▲
65-315/150/P	225	175	160	225	-	1 x 743760350▲
80-160/15/P	180	100	-	180	-	-
80-160/22A/P	180	125	-	180	-	-
80-160/22/P	180	125	-	180	-	-
80-160/30/P	180	125	-	180	-	-
80-200/30/P	180	125	-	180	-	-
80-200/40/P	180	125	-	180	-	-
80-200/55A/P	180	150	-	180	-	-
80-200/55/P	180	150	-	180	-	-
80-250/55A/P	200	150	-	200	-	-
80-250/55/P	200	150	-	200	-	-
80-250/75/P	200	150	-	200	-	-
80-250/110/P	200	175	160	200	-	4 x 161407670
80-315/110A/P	250	175	160	250	-	1 x 743760360▲
80-315/110/P	250	175	160	250	-	1 x 743760360▲
80-315/150/P	250	175	160	250	-	1 x 743760360▲
80-315/185/W	250	175	180	250	-	1 x 743760290▲
80-315/220/W	250	175	180	250	-	1 x 743760290▲
80-400/185/W	280	175	180	280	-	1 x 743760300▲
80-400/220/W	280	175	180	280	-	1 x 743760300▲
80-400/300/W	280	200	200	280	-	1 x 743760230▲
80-400/370/W	280	225	225	280	-	1 x 743760170▲

* On request. ▲Support base kit.

LOWARA
a xylem brand

NSCS 100 ÷ 250 SERIES, 4 POLES
SHIM FOR PUMP AND MOTOR FEET

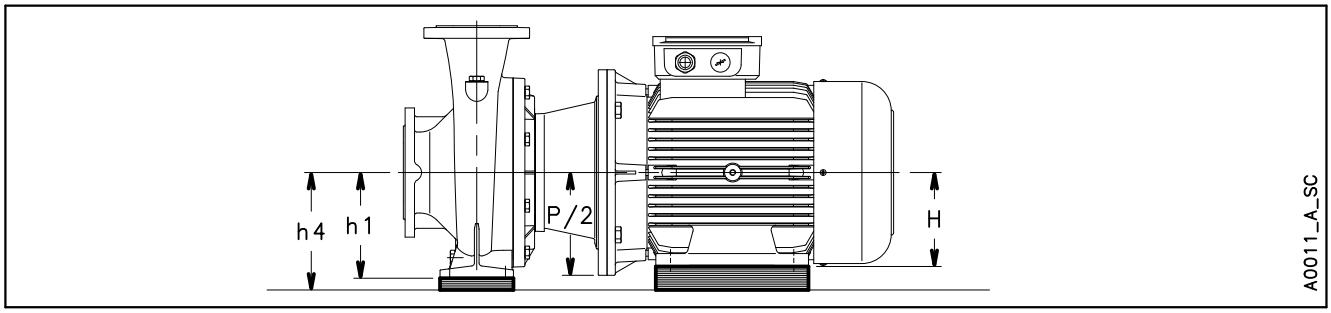

PUMP TYPE NSCS..4	DIMENSIONS (mm)				SHIM* CODE	
	PUMP	MOTOR				
	h1	P/2	H	h4	Pump	Motor
100-160/22A/P	200	125	-	200	-	-
100-160/22/P	200	125	-	200	-	-
100-160/30/P	200	125	-	200	-	-
100-160/40/P	200	125	-	200	-	-
100-200/40/P	200	125	-	200	-	-
100-200/55/P	200	150	-	200	-	-
100-200/75/P	200	150	-	200	-	-
100-250/75/P	225	150	-	225	-	-
100-250/110/P	225	175	160	225	-	1 x 743760350▲
100-315/110/P	250	175	160	250	-	1 x 743760360▲
100-315/150/P	250	175	160	250	-	1 x 743760360▲
100-315/185/W	250	175	180	250	-	1 x 743760290▲
100-315/220/W	250	175	180	250	-	1 x 743760290▲
100-315/300/W	250	200	200	250	-	1 x 743760220▲
100-400/300/W	280	200	200	280	-	1 x 743760230▲
100-400/370/W	280	225	225	280	-	1 x 743760170▲
100-400/450/W	280	225	225	280	-	1 x 743760170▲
125-200/55/P	250	150	-	250	-	-
125-200/75/P	250	150	-	250	-	-
125-200/110/P	250	175	160	250	-	1 x 743760360▲
125-250/110/P	250	175	160	250	-	1 x 743760360▲
125-250/150/P	250	175	160	250	-	1 x 743760360▲
125-315/185/W	280	175	180	280	-	1 x 743760300▲
125-315/220/W	280	175	180	280	-	1 x 743760300▲
125-315/300/W	280	200	200	280	-	1 x 743760230▲
125-315/370/W	280	225	225	280	-	1 x 743760170▲
125-400/370/W	315	225	225	315	-	1 x 743760180▲
125-400/450/W	315	225	225	315	-	1 x 743760180▲
125-400/550/W	315	275	250	315	-	1 x 743760130▲
125-400/750/W	315	275	280	315	-	2 x 768082130
150-200/110A/P	280	175	160	280	-	1 x 743760370▲
150-200/110/P	280	175	160	280	-	1 x 743760370▲
150-200/150A/P	280	175	160	280	-	1 x 743760370▲
150-200/150/P	280	175	160	280	-	1 x 743760370▲
150-250/150/P	280	175	160	280	-	1 x 743760370▲
150-250/185/W	280	175	180	280	-	1 x 743760300▲
150-250/220/W	280	175	180	280	-	1 x 743760300▲
150-250/300/W	280	200	200	280	-	1 x 743760230▲
150-315/300/W	280	200	200	280	-	1 x 743760230▲
150-315/370/W	280	225	225	280	-	1 x 743760170▲
150-315/450/W	280	225	225	280	-	1 x 743760170▲

PUMP TYPE NSCS..4	DIMENSIONS (mm)				SHIM* CODE	
	PUMP	MOTOR				
	h1	P/2	H	h4	Pump	Motor
150-400/450/W	315	225	225	315	-	1 x 743760180▲
150-400/550/W	315	275	250	315	-	1 x 743760130▲
150-400/750/W	315	275	280	315	-	2 x 768082130
150-400/900/W	315	275	280	315	-	2 x 768082130
200-250/185/W	355	175	180	355	-	1 x 743760320▲
200-250/220/W	355	175	180	355	-	1 x 743760320▲
200-250/300A/W	355	200	200	355	-	1 x 743760250▲
200-250/300/W	355	200	200	355	-	1 x 743760250▲
200-315/370/W	355	225	225	355	-	1 x 743760190▲
200-315/450/W	355	225	225	355	-	1 x 743760190▲
200-315/550/W	355	275	250	355	-	1 x 743760140▲
200-315/750/W	355	275	280	355	-	1 x 743760100▲
250-315/370/W	400	225	225	400	-	1 x 743760200▲
250-315/450/W	400	225	225	400	-	1 x 743760200▲
250-315/550/W	400	275	250	400	-	1 x 743760150▲
250-315/750/W	400	275	280	400	-	1 x 743760110▲

* On request. ▲Support base kit.

SHIM FOR MOTOR FEET

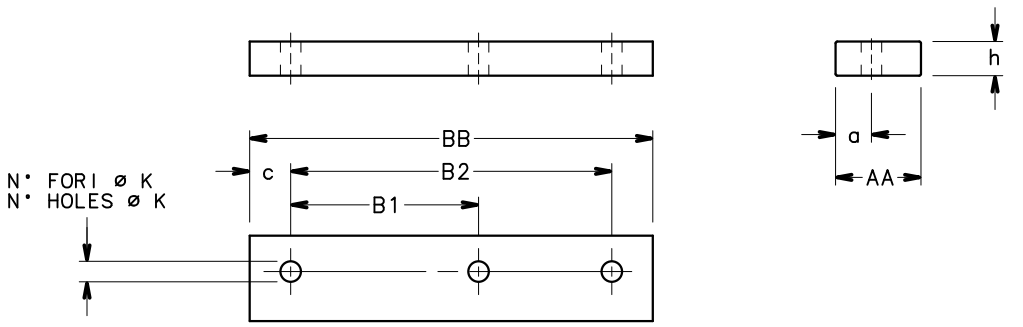

CODE	DIMENSIONS (mm)									
	DENOMINATION								HOLES	
	AA	x h	x	BB	a	B1	B2	c	N°	ø K
161402570	35	20		125	17	100	-	12,5	2	10
161402320	40	10		155	20	100	125	15	3	10
161402340	40	12		155	20	100	125	15	3	10
161402360	40	12		180	17	140	-	20	2	14
161402380	40	20		180	17	140	-	20	2	14
161402400	40	30		155	20	100	125	15	3	10
161402420	40	40		180	17	140	-	20	2	14
161402440	50	8		226	21	140	178	24	3	14
161402460	50	20		226	21	140	178	24	3	14
161407670	50	20		304	25	210	254	25	3	14
161407690	50	30		304	25	210	254	25	3	14
768082180	80	5		332	35.5	241	279	26,5	3	14
768082190	80	10		332	35.5	241	279	26,5	3	14
161407590	80	20		332	35.5	241	279	26,5	3	14
768082110	80	25		370	33,5	305	-	32,5	2	19
768082120	80	25		412	40	286	311	50,5	3	19
161407990	100	30		467	50	311	349	59	3	22
768082130	100	35		517	50	368	419	49	3	24

SHIM FOR PUMP FEET

sp-mot-nscs-nscf-en_d_td

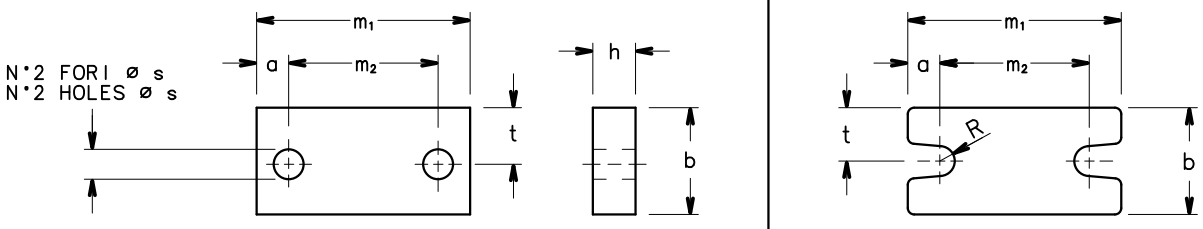

CODE	DIMENSIONS (mm)								
	DENOMINATION								
	b x	h	x	m_1	a	m_2	ø s	R	t
161407770	40	10		160	25	110	14	-	16,5
161403250	40	20		160	25	110	14	-	16,5
161404360	40	25		160	25	110	14	-	16,5
161407780	40	30		160	25	110	14	-	16,5
161407550	50	8		100	15	70	14	-	26,5
161403210	50	20		100	15	70	14	-	26,5
161403230	70	20		125	15	95	14	-	37,5
161407570	70	25		125	15	95	14	-	37,5
161407790	80	10		160	20	120	18	-	42,5
161404380	80	25		160	20	120	18	-	42,5
161407800	80	30		160	20	120	18	-	42,5
768003140	85	10		160	32,5	95 / 120	-	9	42,5
768003150	85	15		160	32,5	95 / 120	-	9	42,5
768003170	85	30		160	32,5	95 / 120	-	9	42,5
768003180	85	45		160	32,5	95 / 120	-	9	42,5
768003190	85	50		160	32,5	95 / 120	-	9	42,5

sp-pompa-nscf-en_d_td

NSCS SUPPORT BASE KIT

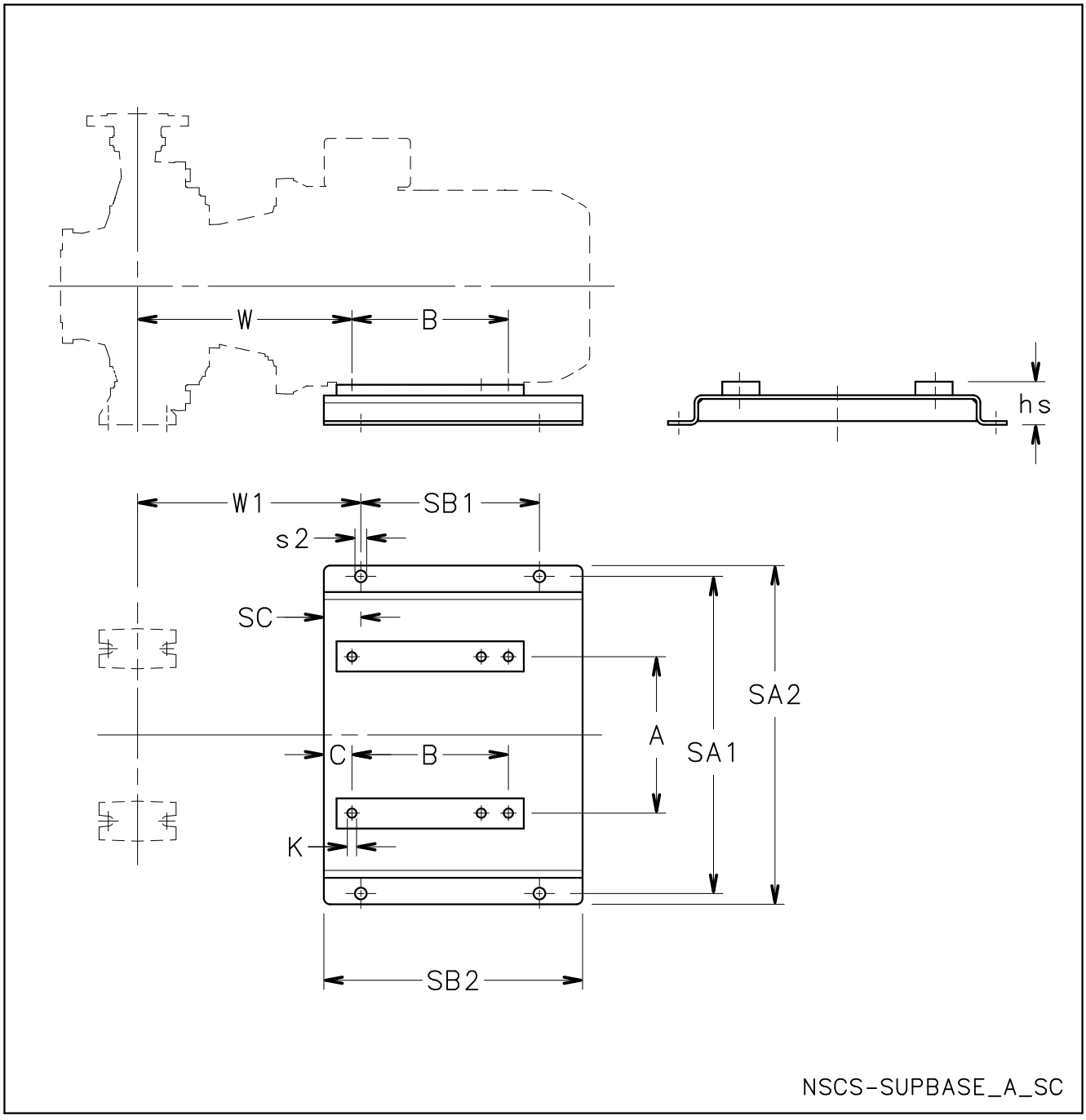

LOWARA
a xylem brand

NSCS SUPPORT BASE KIT

CODE	PUMP TYPE	DIMENSIONS (mm)												
KIT	NSCS..4	A	B	C	hs	K	W	W1	SA1	SA2	SB1	SB2	SC	s2
743760350	50-315/110/P	254	210	33	65	15	348	376	515	550	290	420	60	19
743760350	65-315/110/P	254	210	33	65	15	348	376	515	550	290	420	60	19
743760350	65-315/150/P	254	254	33	65	15	348	376	515	550	290	420	60	19
743760360	80-315/110A/P	254	210	33	90	15	348	376	515	550	290	420	60	19
743760360	80-315/110/P	254	210	33	90	15	348	376	515	550	290	420	60	19
743760360	80-315/150/P	254	254	33	90	15	348	376	515	550	290	420	60	19
743760290	80-315/185/W	279	241	46	70	15	361	376	515	550	290	420	60	19
743760290	80-315/220/W	279	279	46	70	15	361	376	515	550	290	420	60	19
743760300	80-400/185/W	279	241	46	100	15	375	390	515	550	290	420	60	19
743760300	80-400/220/W	279	279	46	100	15	375	390	515	550	290	420	60	19
743760230	80-400/300/W	318	305	58	80	19	387	390	515	550	290	420	60	19
743760170	80-400/370/W	356	286/311	60	55	19	433	433	605	640	392	510	60	19
743760350	100-250/110/P	254	210	33	65	15	348	376	515	550	290	420	60	19
743760360	100-315/110/P	254	210	33	90	15	348	376	515	550	290	420	60	19
743760360	100-315/150/P	254	254	33	90	15	348	376	515	550	290	420	60	19
743760290	100-315/185/W	279	241	46	70	15	361	376	515	550	290	420	60	19
743760290	100-315/220/W	279	279	46	70	15	361	376	515	550	290	420	60	19
743760220	100-315/300/W	318	305	58	50	19	379	382	515	550	290	420	60	19
743760230	100-400/300/W	318	305	58	80	19	387	390	515	550	290	420	60	19
743760170	100-400/370/W	356	286/311	60	55	19	433	433	605	640	392	510	60	19
743760170	100-400/450/W	356	286/311	60	55	19	433	433	605	640	392	510	60	19
743760360	125-200/110/P	254	210	33	90	15	348	376	515	550	290	420	60	19
743760360	125-250/110/P	254	210	33	90	15	348	376	515	550	290	420	60	19
743760360	125-250/150/P	254	254	33	90	15	348	376	515	550	290	420	60	19
743760300	125-315/185/W	279	241	46	100	15	375	390	515	550	290	420	60	19
743760300	125-315/220/W	279	279	46	100	15	375	390	515	550	290	420	60	19
743760230	125-315/300/W	318	305	58	80	19	387	390	515	550	290	420	60	19
743760170	125-315/370/W	356	286/311	60	55	19	433	433	605	640	392	510	60	19
743760180	125-400/370/W	356	286/311	60	90	19	433	433	605	640	392	510	60	19
743760180	125-400/450/W	356	286/311	60	90	19	433	433	605	640	392	510	60	19
743760130	125-400/550/W	406	349	79	65	24	452	433	605	640	392	510	60	19
743760370	150-200/110A/P	254	210	33	120	15	348	376	515	550	290	420	60	19
743760370	150-200/110/P	254	210	33	120	15	348	376	515	550	290	420	60	19
743760370	150-200/150A/P	254	254	33	120	15	348	376	515	550	290	420	60	19
743760370	150-200/150/P	254	254	33	120	15	348	376	515	550	290	420	60	19
743760370	150-250/150/P	254	254	33	120	15	362	390	515	550	290	420	60	19
743760300	150-250/185/W	279	241	46	100	15	375	390	515	550	290	420	60	19
743760300	150-250/220/W	279	279	46	100	15	375	390	515	550	290	420	60	19
743760230	150-250/300/W	318	305	58	80	19	387	390	515	550	290	420	60	19
743760230	150-315/300/W	318	305	58	80	19	387	390	515	550	290	420	60	19
743760170	150-315/370/W	356	286/311	60	55	19	433	433	605	640	392	510	60	19
743760170	150-315/450/W	356	286/311	60	55	19	433	433	605	640	392	510	60	19
743760180	150-400/450/W	356	286/311	60	90	19	433	433	605	640	392	510	60	19
743760130	150-400/550/W	406	349	79	65	24	452	433	605	640	392	510	60	19
743760320	200-250/185/W	279	241	46	175	15	375	390	515	550	290	420	60	19
743760320	200-250/220/W	279	279	46	175	15	375	390	515	550	290	420	60	19
743760250	200-250/300A/W	318	305	58	155	19	387	390	515	550	290	420	60	19
743760250	200-250/300/W	318	305	58	155	19	387	390	515	550	290	420	60	19
743760190	200-315/370/W	356	286/311	60	130	19	433	433	605	640	392	510	60	19
743760190	200-315/450/W	356	286/311	60	130	19	433	433	605	640	392	510	60	19
743760140	200-315/550/W	406	349	79	105	24	452	433	605	640	392	510	60	19
743760100	200-315/750/W	457	368/419	71	75	24	474	474	655	690	420	560	70	19
743760200	250-315/370/W	356	286/311	60	175	19	433	433	605	640	392	510	60	19
743760200	250-315/450/W	356	286/311	60	175	19	433	433	605	640	392	510	60	19
743760150	250-315/550/W	406	349	79	150	24	452	433	605	640	392	510	60	19
743760110	250-315/750/W	457	368/419	71	120	24	474	474	655	690	420	560	70	19

LOWARA
a xylem brand

REPORTS AND DECLARATIONS

REPORTS AND DECLARATIONS

i) Test reports

a) **Factory Test Report**
- Test report compiled at the end of the assembly line, including flow-head performance test (ISO 9906:2012 – Grade 3B) and hydrostatic pressure test.

b) **Audit Test Report**
- Test report for electric pumps compiled in the test room, comprising flow-head-pump input-pump efficiency performance test (according to ISO 9906:2012)

c) **NPSH Test Report**
- Test report for electric pumps compiled in the test room, comprising flow-NPSH performance test (according to ISO 9906:2012)

d) **Noise Test Report**
- Report indicating sound pressure and power measurements (EN ISO 20361, EN ISO 11203, EN ISO 4871)

e) **Vibration Test Report**
(unavailable for submerged or submergible pumps)
- Report indicating vibration measurements (ISO 10816-1)

ii) Declaration of product conformity with the technical requirements indicated in the order

a) **EN 10204:2004 - type 2.1**
- does not include test results on supplied or similar products.

b) **EN 10204:2004 - type 2.2**
- includes test results (materials certificates) on similar products.

iii) Issue of a further EC Declaration of Conformity,
- in addition to the one accompanying the product, it comprises references to European law and the main technical standards (e.g.: MD 2006/42/EC, EMCD 2004/108/EC, ErP 2009/125/EC).

N.B.: if the request is made after receipt of the product, communicate the code (name) and serial number (date + progressive number).

iv) Manufacturer's declaration of conformity
- relative to one of more types of products without indicating specific codes and serial numbers.

v) Other certificates and/or documentation on request
- subject to availability or feasibility.

vi) Duplication of certificates and/or documentation on request
- subject to availability or feasibility.

LOWARA
a xylem brand

TECHNICAL APPENDIX

NPSH

The minimum operating values that can be reached at the pump suction end are limited by the onset of cavitation.

Cavitation is the formation of vapour-filled cavities within liquids where the pressure is locally reduced to a critical value, or where the local pressure is equal to, or just below the vapour pressure of the liquid.

The vapour-filled cavities flow with the current and when they reach a higher pressure area the vapour contained in the cavities condenses. The cavities collide, generating pressure waves that are transmitted to the walls. These, being subjected to stress cycles, gradually become deformed and yield due to fatigue. This phenomenon, characterized by a metallic noise produced by the hammering on the pipe walls, is called incipient cavitation.

The damage caused by cavitation may be magnified by electrochemical corrosion and a local rise in temperature due to the plastic deformation of the walls. The materials that offer the highest resistance to heat and corrosion are alloy steels, especially austenitic steel. The conditions that trigger cavitation may be assessed by calculating the total net suction head, referred to in technical literature with the acronym NPSH (Net Positive Suction Head).

The NPSH represents the total energy (expressed in m.) of the liquid measured at suction under conditions of incipient cavitation, excluding the vapour pressure (expressed in m.) that the liquid has at the pump inlet.

To find the static height hz at which to install the machine under safe conditions, the following formula must be verified:

hp + hz $\geq$ **(NPSHr + 0.5) + hf + hpv** ①

where:

hp is the absolute pressure applied to the free liquid surface in the suction tank, expressed in m. of liquid; hp is the quotient between the barometric pressure and the specific weight of the liquid.

hz is the suction lift between the pump axis and the free liquid surface in the suction tank, expressed in m.; hz is negative when the liquid level is lower than the pump axis.

hf is the flow resistance in the suction line and its accessories, such as: fittings, foot valve, gate valve, elbows, etc.

hpv is the vapour pressure of the liquid at the operating temperature, expressed in m. of liquid. hpv is the quotient between the Pv vapour pressure and the liquid's specific weight.

0,5 is the safety factor.

The maximum possible suction head for installation depends on the value of the atmospheric pressure (i.e. the elevation above sea level at which the pump is installed) and the temperature of the liquid.

To help the user, with reference to water temperature (4° C) and to the elevation above sea level, the following tables show the drop in hydraulic pressure head in relation to the elevation above sea level, and the suction loss in relation to temperature.

Water temperature (°C)	20	40	60	80	90	110	120
Suction loss (m)	0,2	0,7	2,0	5,0	7,4	15,4	21,5

Elevation above sea level (m)	500	1000	1500	2000	2500	3000
Suction loss (m)	0,55	1,1	1,65	2,2	2,75	3,3

Friction loss is shown in the tables Flow Resistance of this catalogue. To reduce it to a minimum, especially in cases of high suction head (over 4-5 m.) or within the operating limits with high flow rates, we recommend using a suction line having a larger diameter than that of the pump's suction port.
It is always a good idea to position the pump as close as possible to the liquid to be pumped.

Make the following calculation:

Liquid: water at ~15°C $\gamma = 1$ kg/dm^3
Flow rate required: 25 m^3/h
Head for required delivery: 70 m.
Suction lift: 3,5 m.
The selection is an 33SV3G075T pump whose NPSH required value is, at 25 m^3/h, of 2 m.

For water at 15 °C

hp = Pa / γ = 10,33m, hpv = Pv / γ = 0,174m (0,01701 bar)

The Hf flow resistance in the suction line with foot valves is ~ 1,2 m.
By substituting the parameters in formula ① with the numeric values above, we have:

$10,33 + (-3,5) \geq (2 + 0,5) + 1,2 + 0,17$

from which we have: $6,8 > 3,9$

The relation is therefore verified.

VAPOUR PRESSURE
VAPOUR PRESSURE ps AND ρ DENSITY OF WATER TABLE

t	T	ps	ρ
°C	K	bar	kg/dm³
0	273,15	0,00611	0,9998
1	274,15	0,00657	0,9999
2	275,15	0,00706	0,9999
3	276,15	0,00758	0,9999
4	277,15	0,00813	1,0000
5	278,15	0,00872	1,0000
6	279,15	0,00935	1,0000
7	280,15	0,01001	0,9999
8	281,15	0,01072	0,9999
9	282,15	0,01147	0,9998
10	283,15	0,01227	0,9997
11	284,15	0,01312	0,9997
12	285,15	0,01401	0,9996
13	286,15	0,01497	0,9994
14	287,15	0,01597	0,9993
15	288,15	0,01704	0,9992
16	289,15	0,01817	0,9990
17	290,15	0,01936	0,9988
18	291,15	0,02062	0,9987
19	292,15	0,02196	0,9985
20	293,15	0,02337	0,9983
21	294,15	0,24850	0,9981
22	295,15	0,02642	0,9978
23	296,15	0,02808	0,9976
24	297,15	0,02982	0,9974
25	298,15	0,03166	0,9971
26	299,15	0,03360	0,9968
27	300,15	0,03564	0,9966
28	301,15	0,03778	0,9963
29	302,15	0,04004	0,9960
30	303,15	0,04241	0,9957
31	304,15	0,04491	0,9954
32	305,15	0,04753	0,9951
33	306,15	0,05029	0,9947
34	307,15	0,05318	0,9944
35	308,15	0,05622	0,9940
36	309,15	0,05940	0,9937
37	310,15	0,06274	0,9933
38	311,15	0,06624	0,9930
39	312,15	0,06991	0,9927
40	313,15	0,07375	0,9923
41	314,15	0,07777	0,9919
42	315,15	0,08198	0,9915
43	316,15	0,09639	0,9911
44	317,15	0,09100	0,9907
45	318,15	0,09582	0,9902
46	319,15	0,10086	0,9898
47	320,15	0,10612	0,9894
48	321,15	0,11162	0,9889
49	322,15	0,11736	0,9884
50	323,15	0,12335	0,9880
51	324,15	0,12961	0,9876
52	325,15	0,13613	0,9871
53	326,15	0,14293	0,9862
54	327,15	0,15002	0,9862

t	T	ps	ρ
°C	K	bar	kg/dm³
55	328,15	0,15741	0,9857
56	329,15	0,16511	0,9852
57	330,15	0,17313	0,9846
58	331,15	0,18147	0,9842
59	332,15	0,19016	0,9837
60	333,15	0,1992	0,9832
61	334,15	0,2086	0,9826
62	335,15	0,2184	0,9821
63	336,15	0,2286	0,9816
64	337,15	0,2391	0,9811
65	338,15	0,2501	0,9805
66	339,15	0,2615	0,9799
67	340,15	0,2733	0,9793
68	341,15	0,2856	0,9788
69	342,15	0,2984	0,9782
70	343,15	0,3116	0,9777
71	344,15	0,3253	0,9770
72	345,15	0,3396	0,9765
73	346,15	0,3543	0,9760
74	347,15	0,3696	0,9753
75	348,15	0,3855	0,9748
76	349,15	0,4019	0,9741
77	350,15	0,4189	0,9735
78	351,15	0,4365	0,9729
79	352,15	0,4547	0,9723
80	353,15	0,4736	0,9716
81	354,15	0,4931	0,9710
82	355,15	0,5133	0,9704
83	356,15	0,5342	0,9697
84	357,15	0,5557	0,9691
85	358,15	0,5780	0,9684
86	359,15	0,6011	0,9678
87	360,15	0,6249	0,9671
88	361,15	0,6495	0,9665
89	362,15	0,6749	0,9658
90	363,15	0,7011	0,9652
91	364,15	0,7281	0,9644
92	365,15	0,7561	0,9638
93	366,15	0,7849	0,9630
94	367,15	0,8146	0,9624
95	368,15	0,8453	0,9616
96	369,15	0,8769	0,9610
97	370,15	0,9094	0,9602
98	371,15	0,9430	0,9596
99	372,15	0,9776	0,9586
100	373,15	1,0133	0,9581
102	375,15	1,0878	0,9567
104	377,15	1,1668	0,9552
106	379,15	1,2504	0,9537
108	381,15	1,3390	0,9522
110	383,15	1,4327	0,9507
112	385,15	1,5316	0,9491
114	387,15	1,6362	0,9476
116	389,15	1,7465	0,9460
118	391,15	1,8628	0,9445

t	T	ps	ρ
°C	K	bar	kg/dm³
120	393,15	1,9854	0,9429
122	395,15	2,1145	0,9412
124	397,15	2,2504	0,9396
126	399,15	2,3933	0,9379
128	401,15	2,5435	0,9362
130	403,15	2,7013	0,9346
132	405,15	2,867	0,9328
134	407,15	3,041	0,9311
136	409,15	3,223	0,9294
138	411,15	3,414	0,9276
140	413,15	3,614	0,9258
145	418,15	4,155	0,9214
155	428,15	5,433	0,9121
160	433,15	6,181	0,9073
165	438,15	7,008	0,9024
170	433,15	7,920	0,8973
175	448,15	8,924	0,8921
180	453,15	10,027	0,8869
185	458,15	11,233	0,8815
190	463,15	12,551	0,8760
195	468,15	13,987	0,8704
200	473,15	15,550	0,8647
205	478,15	17,243	0,8588
210	483,15	19,077	0,8528
215	488,15	21,060	0,8467
220	493,15	23,198	0,8403
225	498,15	25,501	0,8339
230	503,15	27,976	0,8273
235	508,15	30,632	0,8205
240	513,15	33,478	0,8136
245	518,15	36,523	0,8065
250	523,15	39,776	0,7992
255	528,15	43,246	0,7916
260	533,15	46,943	0,7839
265	538,15	50,877	0,7759
270	543,15	55,058	0,7678
275	548,15	59,496	0,7593
280	553,15	64,202	0,7505
285	558,15	69,186	0,7415
290	563,15	74,461	0,7321
295	568,15	80,037	0,7223
300	573,15	85,927	0,7122
305	578,15	92,144	0,7017
310	583,15	98,70	0,6906
315	588,15	105,61	0,6791
320	593,15	112,89	0,6669
325	598,15	120,56	0,6541
330	603,15	128,63	0,6404
340	613,15	146,05	0,6102
350	623,15	165,35	0,5743
360	633,15	186,75	0,5275
370	643,15	210,54	0,4518
374,15	647,30	221,20	0,3154

G-at_npsh_b_sc

TABLE OF FLOW RESISTANCE IN 100 m OF STRAIGHT CAST IRON PIPELINE (HAZEN-WILLIAMS FORMULA C=100)

FLOW RATE			NOMINAL DIAMETER in mm and inches																
m^3/h	l/min		15 1/2"	20 3/4"	25 1"	32 1 1/4"	40 1 1/2"	50 2	65 2 1/2"	80 3"	100 4"	125 5"	150 6"	175 7"	200 8"	250 10"	300 12"	350 14"	400 16"
0,6	10	v	0,94	0,53	0,34	0,21	0,13												
		hr	16	3,94	1,33	0,40	0,13												
0,9	15	v	1,42	0,80	0,51	0,31	0,20												
		hr	33,9	8,35	2,82	0,85	0,29												
1,2	20	v	1,89	1,06	0,68	0,41	0,27	0,17											
		hr	57,7	14,21	4,79	1,44	0,49	0,16											
1,5	25	v	2,36	1,33	0,85	0,52	0,33	0,21											
		hr	87,2	21,5	7,24	2,18	0,73	0,25											
1,8	30	v	2,83	1,59	1,02	0,62	0,40	0,25											
		hr	122	30,1	10,1	3,05	1,03	0,35											
2,1	35	v	3,30	1,86	1,19	0,73	0,46	0,30											
		hr	162	40,0	13,5	4,06	1,37	0,46											
2,4	40	v		2,12	1,36	0,83	0,53	0,34	0,20										
		hr		51,2	17,3	5,19	1,75	0,59	0,16										
3	50	v		2,65	1,70	1,04	0,66	0,42	0,25										
		hr		77,4	26,1	7,85	2,65	0,89	0,25										
3,6	60	v		3,18	2,04	1,24	0,80	0,51	0,30										
		hr		108	36,6	11,0	3,71	1,25	0,35										
4,2	70	v		3,72	2,38	1,45	0,93	0,59	0,35										
		hr		144	48,7	14,6	4,93	1,66	0,46										
4,8	80	v		4,25	2,72	1,66	1,06	0,68	0,40										
		hr		185	62,3	18,7	6,32	2,13	0,59										
5,4	90	v			3,06	1,87	1,19	0,76	0,45	0,30									
		hr			77,5	23,3	7,85	2,65	0,74	0,27									
6	100	v			3,40	2,07	1,33	0,85	0,50	0,33									
		hr			94,1	28,3	9,54	3,22	0,90	0,33									
7,5	125	v			4,25	2,59	1,66	1,06	0,63	0,41									
		hr			142	42,8	14,4	4,86	1,36	0,49									
9	150	v				3,11	1,99	1,27	0,75	0,50	0,32								
		hr				59,9	20,2	6,82	1,90	0,69	0,23								
10,5	175	v				3,63	2,32	1,49	0,88	0,58	0,37								
		hr				79,7	26,9	9,07	2,53	0,92	0,31								
12	200	v				4,15	2,65	1,70	1,01	0,66	0,42								
		hr				102	34,4	11,6	3,23	1,18	0,40								
15	250	v				5,18	3,32	2,12	1,26	0,83	0,53	0,34							
		hr				154	52,0	17,5	4,89	1,78	0,60	0,20							
18	300	v					3,98	2,55	1,51	1,00	0,64	0,41							
		hr					72,8	24,6	6,85	2,49	0,84	0,28							
24	400	v					5,31	3,40	2,01	1,33	0,85	0,54	0,38						
		hr					124	41,8	11,66	4,24	1,43	0,48	0,20						
30	500	v					6,63	4,25	2,51	1,66	1,06	0,68	0,47						
		hr					187	63,2	17,6	6,41	2,16	0,73	0,30						
36	600	v						5,10	3,02	1,99	1,27	0,82	0,57	0,42					
		hr						88,6	24,7	8,98	3,03	1,02	0,42	0,20					
42	700	v						5,94	3,52	2,32	1,49	0,95	0,66	0,49					
		hr						118	32,8	11,9	4,03	1,36	0,56	0,26					
48	800	v						6,79	4,02	2,65	1,70	1,09	0,75	0,55					
		hr						151	42,0	15,3	5,16	1,74	0,72	0,34					
54	900	v						7,64	4,52	2,99	1,91	1,22	0,85	0,62					
		hr						188	52,3	19,0	6,41	2,16	0,89	0,42					
60	1000	v							5,03	3,32	2,12	1,36	0,94	0,69	0,53				
		hr							63,5	23,1	7,79	2,63	1,08	0,51	0,27				
75	1250	v							6,28	4,15	2,65	1,70	1,18	0,87	0,66				
		hr							96,0	34,9	11,8	3,97	1,63	0,77	0,40				
90	1500	v							7,54	4,98	3,18	2,04	1,42	1,04	0,80				
		hr							134	48,9	16,5	5,57	2,29	1,08	0,56				
105	1750	v							8,79	5,81	3,72	2,38	1,65	1,21	0,93				
		hr							179	65,1	21,9	7,40	3,05	1,44	0,75				
120	2000	v								6,63	4,25	2,72	1,89	1,39	1,06	0,68			
		hr								83,3	28,1	9,48	3,90	1,84	0,96	0,32			
150	2500	v								8,29	5,31	3,40	2,36	1,73	1,33	0,85			
		hr								126	42,5	14,3	5,89	2,78	1,45	0,49			
180	3000	v									6,37	4,08	2,83	2,08	1,59	1,02	0,71		
		hr									59,5	20,1	8,26	3,90	2,03	0,69	0,28		
210	3500	v									7,43	4,76	3,30	2,43	1,86	1,19	0,83		
		hr									79,1	26,7	11,0	5,18	2,71	0,91	0,38		
240	4000	v									8,49	5,44	3,77	2,77	2,12	1,36	0,94		
		hr									101	34,2	14,1	6,64	3,46	1,17	0,48		
300	5000	v										6,79	4,72	3,47	2,65	1,70	1,18		
		hr										51,6	21,2	10,0	5,23	1,77	0,73		
360	6000	v										8,15	5,66	4,16	3,18	2,04	1,42		
		hr										72,3	29,8	14,1	7,33	2,47	1,02		
420	7000	v											6,61	4,85	3,72	2,38	1,65	1,21	
		hr											39,6	18,7	9,75	3,29	1,35	0,64	
480	8000	v											7,55	5,55	4,25	2,72	1,89	1,39	
		hr											50,7	23,9	12,49	4,21	1,73	0,82	
540	9000	v											8,49	6,24	4,78	3,06	2,12	1,56	1,19
		hr											63,0	29,8	15,5	5,24	2,16	1,02	0,53
600	10000	v												6,93	5,31	3,40	2,36	1,73	1,33
		hr												36,2	18,9	6,36	2,62	1,24	0,65

The hr values must be multiplied by:

0,71 for galvanized or painted steel pipes

0,54 for stainless steel or copper pipes

0,47 for PVC or PE pipes

hr = flow resistance for 100 m of straight pipeline (m)

V = water speed (m/s)

G-at-pct-en_b_th

FLOW RESISTANCE
TABLE OF FLOW RESISTANCE IN BENDS, VALVES AND GATES

The flow resistance is calculated using the equivalent pipeline length method according to the table below:

ACCESSORY TYPE	DN											
	25	32	40	50	65	80	100	125	150	200	250	300
	Equivalent pipeline length (m)											
45° bend	0,2	0,2	0,4	0,4	0,6	0,6	0,9	1,1	1,5	1,9	2,4	2,8
90° bend	0,4	0,6	0,9	1,1	1,3	1,5	2,1	2,6	3,0	3,9	4,7	5,8
90° smooth bend	0,4	0,4	0,4	0,6	0,9	1,1	1,3	1,7	1,9	2,8	3,4	3,9
Union tee or cross	1,1	1,3	1,7	2,1	2,6	3,2	4,3	5,3	6,4	7,5	10,7	12,8
Gate valve	-	-	-	0,2	0,2	0,2	0,4	0,4	0,6	0,9	1,1	1,3
Foot check valve	1,1	1,5	1,9	2,4	3,0	3,4	4,7	5,9	7,4	9,6	11,8	13,9
Non return valve	1,1	1,5	1,9	2,4	3,0	3,4	4,7	5,9	7,4	9,6	11,8	13,9

G-a-pcv-en_b_th

The table is valid for the Hazen Williams coefficient C=100 (cast iron pipework);
for steel pipework, multiply the values by 1,41;
for stainless steel, copper and coated cast iron pipework, multiply the values by 1,85;
When the **equivalent pipeline length** has been determined, the flow resistance is obtained from the table of flow resistance.
The values given are guideline values which are bound to vary slightly according to the model, especially for gate valves and non-return valves, for which it is a good idea to check the values supplied by manufacturers.

VOLUMETRIC CAPACITY

Litres per minute l/min	Cubic metres per hour m^3/h	Cubic feet per hour ft^3/h	Cubic feet per minute ft^3/min	Imperial gallon per minute Imp. gal/min	U.S. gallon per minute US gal/min
1,0000	0,0600	2,1189	0,0353	0,2200	0,2642
16,6667	**1,0000**	35,3147	0,5886	3,6662	4,4029
0,4719	0,0283	**1,0000**	0,0167	0,1038	0,1247
28,3168	1,6990	60,0000	**1,0000**	6,2288	7,4805
4,5461	0,2728	9,6326	0,1605	**1,0000**	1,2009
3,7854	0,2271	8,0208	0,1337	0,8327	**1,0000**

PRESSURE AND HEAD

Newton per square metre N/m^2	kilo Pascal kPa	bar bar	Pound force per square inch psi	Metre of water m H_2O	Millimetre of mercury mm Hg
1,0000	0,0010	1×10^{-5}	$1,45 \times 10^{-4}$	$1,02 \times 10^{-4}$	0,0075
1 000,0000	**1,0000**	0,0100	0,1450	0,1020	7,5006
1×10^5	100,0000	**1,0000**	14,5038	10,1972	750,0638
6 894,7570	6,8948	0,0689	**1,0000**	0,7031	51,7151
9 806,6500	9,8067	0,0981	1,4223	**1,0000**	73,5561
133,3220	0,1333	0,0013	0,0193	0,0136	**1,0000**

LENGTH

Millimetre mm	Centimetre cm	Metre m	Inch in	Foot ft	Yard yd
1,0000	0,1000	0,0010	0,0394	0,0033	0,0011
10,0000	**1,0000**	0,0100	0,3937	0,0328	0,0109
1 000,0000	100,0000	**1,0000**	39,3701	3,2808	1,0936
25,4000	2,5400	0,0254	**1,0000**	0,0833	0,0278
304,8000	30,4800	0,3048	12,0000	**1,0000**	0,3333
914,4000	91,4400	0,9144	36,0000	3,0000	**1,0000**

VOLUME

Cubic metre m^3	Litre L	Millilitre ml	Imperial gallon imp. gal.	U.S. gallon US gal.	Cubic foot ft^3
1,0000	1 000,0000	1×10^6	219,9694	264,1720	35,3147
0,0010	**1,0000**	1 000,0000	0,2200	0,2642	0,0353
1×10^{-6}	0,0010	**1,0000**	$2,2 \times 10^{-4}$	$2,642 \times 10^{-4}$	$3,53 \times 10^{-5}$
0,0045	4,5461	4 546,0870	**1,0000**	1,2009	0,1605
0,0038	3,7854	3 785,4120	0,8327	**1,0000**	0,1337
0,0283	28,3168	28 316,8466	6,2288	7,4805	**1,0000**

TEMPERATURE

Water	Kelvin K	Celsius °C	Fahrenheit °F	$°F = °C \times \frac{9}{5} + 32$ $°C = (°F - 32) \times \frac{5}{9}$
icing	273,1500	0,0000	32,0000	
boiling	373,1500	100,0000	212,0000	

G-at_pp-en_b_sc

FURTHER PRODUCT SELECTION AND DOCUMENTATION
Xylect

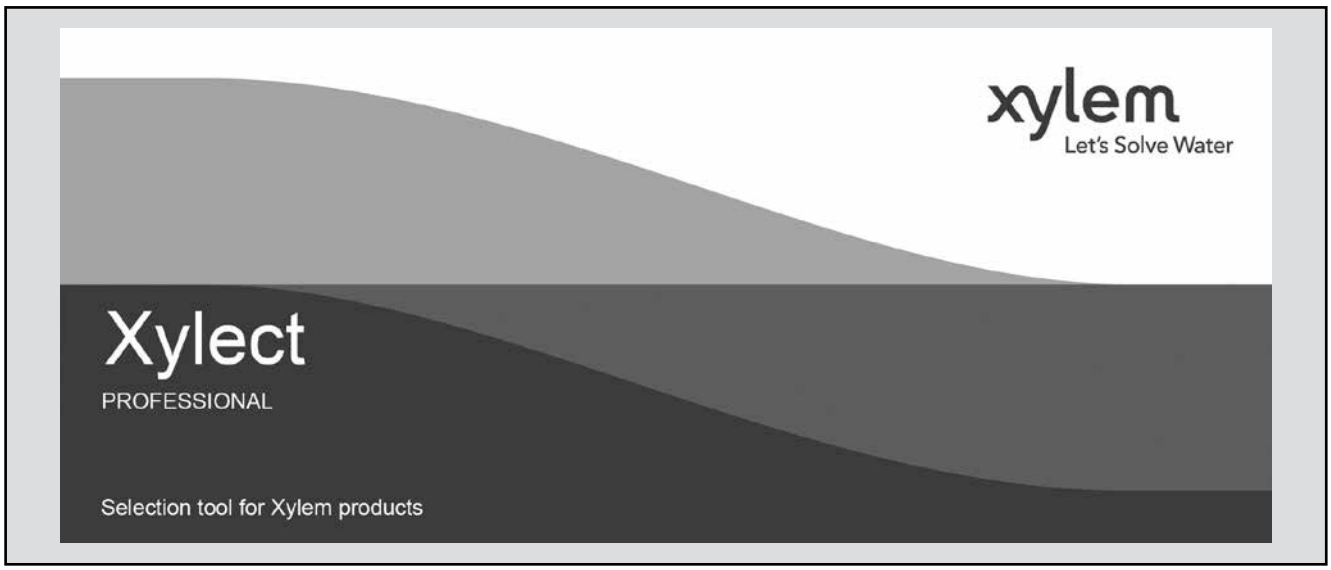

Xylect is pump solution selection software with an extensive online database of product information across the entire Lowara range of pumps and related products, with multiple search options and helpful project management facilities. The system holds up-to-date product information on thousands of products and accessories.

The possibility to search by applications and the detailed information output given makes it easy to make the optimal selection without having detailed knowledge about the Lowara products.

The search can be made by:

- Application
- Product type
- Duty point

Xylect gives a detailed output:

- List with search results
- Performance curves (flow, head, power, efficiency, NPSH)
- Motor data
- Dimensional drawings
- Options
- Data sheet printouts
- Document downloads incl dxf files

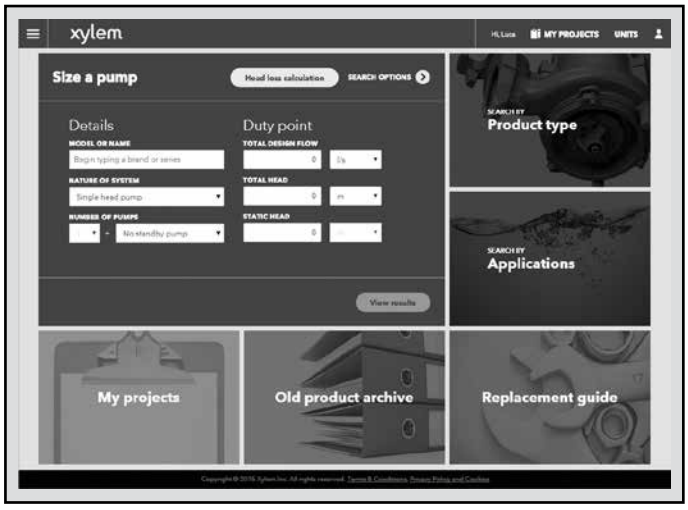

The search by application guides users not familiar with the product range to the right choice.

FURTHER PRODUCT SELECTION AND DOCUMENTATION
Xylect

The detailed output makes it easy to select the optimal pump from the given alternatives.

The best way to work with Xylect is to create a personal account. This makes it possible to:

- Set own standard units
- Create and save projects
- Share projects with other Xylect users

Every registered user has a proper space, where all projects are saved.

For more information about Xylect please contact our sales network or visit www.xylect.com.

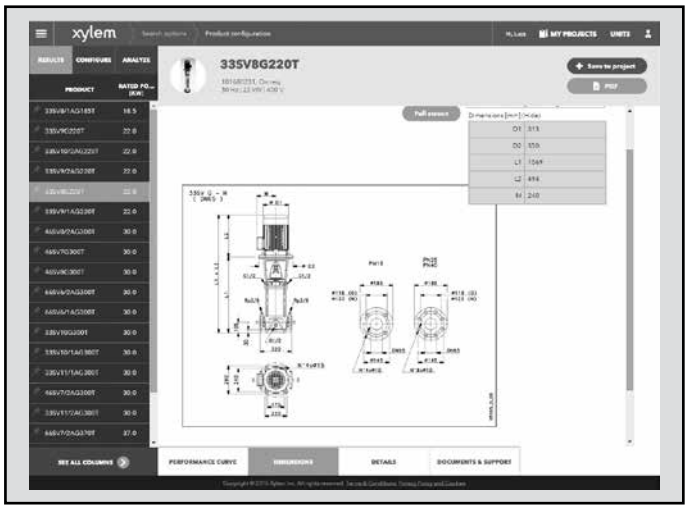

Dimensional drawings appear on the screen and can be downloaded in dxf format.

Xylem |'zīləm|

1) The tissue in plants that brings water upward from the roots;
2) a leading global water technology company.

We're a global team unified in a common purpose: creating advanced technology solutions to the world's water challenges. Developing new technologies that will improve the way water is used, conserved, and re-used in the future is central to our work. Our products and services move, treat, analyze, monitor and return water to the environment, in public utility, industrial, residential and commercial building services settings. Xylem also provides a leading portfolio of smart metering, network technologies and advanced analytics solutions for water, electric and gas utilities. In more than 150 countries, we have strong, long-standing relationships with customers who know us for our powerful combination of leading product brands and applications expertise with a strong focus on developing comprehensive, sustainable solutions.

For more information on how Xylem can help you, go to www.xylem.com.

LOWARA®

WORLD PUMP